Polo 1995 ➤

Mono Motronic injection and ignition system									
Engine ID	ADS	AEA	AEV						

Edition 09.1994

satelettronica

Protected by copyright. Copying for private or commercial purposes, in part or in whole, is not permitted unless authorised by Volkswagen AG. Volkswagen AG does not guarantee or accept any liability with respect to the correctness of information in this document. Copyright by Volkswagen AG.

List of Workshop Manual Repair GroupsList of Workshop Manual Repair GroupsList of Workshop Manual Repair Groups

Polo 1995 ➤

Mono Motronic injection and ignition system

Repair Group

01 - Self diagnosis

24 - Mixture preparation, Injection

28 - Ignition system

Protected by copyright. Copying for private or commercial purposes, in part or in whole, is not permitted unless authorised by Volkswagen AG. Volkswagen AG does not guarantee or accept any liability with respect to the correctness of information in this document. Copyright by Volkswagen AG.

satelettronica

Technical information should always be available to the foremen and mechanics, because their careful and constant adherence to the instructions is essential to ensure vehicle road-worthiness and safety. In addition, the normal basic safety precautions for working on motor vehicles must, as a matter of course, be observed.

All rights reserved.
No reproduction without prior agreement from publisher.

Copyright © 2010 Volkswagen AG, Wolfsburg

00050205620

Contents

01 - Self diagnosis . . . 1
1 Self diagnosis . . . 1
1.1 Self diagnosis . . . 1
1.2 Function . . . 1
1.3 Technical data of self diagnosis . . . 1
1.4 Connecting fault reader V.A.G 1551 and selecting engine electronics control unit . . . 2
1.5 Interrogating fault memory . . . 3
1.6 Fault table . . . 4
1.7 Erasing fault memory . . . 6
1.8 Final control diagnosis . . . 7
1.9 Erasing values learnt by engine electronics control unit . . . 10
1.10 Read measured value block and basic settings . . . 11
1.11 Display group overview . . . 11

24 - Mixture preparation, Injection . . . 15
1 Mono-Motronic injection and ignition system . . . 15
1.1 Mono-Motronic injection and ignition system . . . 15
1.2 Fitting locations overview . . . 15
1.3 Servicing injection part . . . 17
1.4 Dismantling and assembling intake manifold . . . 23
1.5 Dismantling and assembling air cleaner . . . 24
1.6 Servicing injection unit . . . 26
1.7 Safety precautions . . . 31
1.8 Rules for cleanliness . . . 31
1.9 Technical data . . . 32
1.10 Idling speed check . . . 32
1.11 Checking Lambda probe and Lambda control . . . 33
1.12 Checking Lambda probe heating . . . 36
1.13 Checking engine operating mode . . . 36
1.14 Checking throttle valve positioner . . . 38
1.15 Checking and adjusting idling switch . . . 40
1.16 Checking sender for throttle valve positioner . . . 43
1.17 Checking throttle valve potentiometer . . . 44
1.18 Checking coolant temperature sender . . . 46
1.19 Checking intake air temperature sender . . . 48
1.20 Checking injector . . . 51
1.21 Checking speed signal . . . 53
1.22 Checking control unit voltage supply . . . 54
1.23 Checking air conditioner and air conditioner compressor signals . . . 55
1.24 Matching engine electronic control unit to electronic immobilizer . . . 57
1.25 Adapting idling speed . . . 58
1.26 Checking fuel pressure regulator and holding pressure . . . 59
1.27 Checking intake air system for leaks (unmetered air) . . . 61
1.28 Checking intake air preheating . . . 62
1.29 Wire routing engine wiring loom . . . 63

28 - Ignition system . . . 65
1 Mono-Motronic injection and ignition system . . . 65
1.1 Mono-Motronic injection and ignition system . . . 65
1.2 Servicing ignition part . . . 65
1.3 Dismantling and assembling distributor . . . 69
1.4 Safety precautions . . . 70
1.5 Adjustment data, Spark plugs . . . 70
1.6 Checking and adjusting ignition timing . . . 70

Protected by copyright. Copying for private or commercial purposes, in part or in whole, is not permitted unless authorised by Volkswagen AG. Volkswagen AG does not guarantee or accept any liability with respect to the correctness of information in this document. Copyright by Volkswagen AG.

satelettronica

1.7 Checking ignition timing control 72
1.8 Checking Hall sender 72
1.9 Checking ignition transformer 73
1.10 Checking ignition transformer output stage 74
1.11 Checking knock sensor 76

Protected by copyright. Copying for private or commercial purposes, in part or in whole, is not permitted unless authorised by Volkswagen AG. Volkswagen AG does not guarantee or accept any liability with respect to the correctness of information in this document. Copyright by Volkswagen AG.

satelettronica

01 - Self diagnosis

Copyright. Copying for private or commercial purposes, in part or in whole, is not permitted unless authorised by Volkswagen AG. Volkswagen AG does not guarantee or accept any liability with respect to the correctness of information in this document.

1 - Self diagnosis

1.1 - Self diagnosis

Note:

The self-diagnosis monitors only a part of the injection and ignition system. For fault finding the binder "Fault finding engine" must also be used in every case.

1.2 - Function

The Mono-Motronic control unit (J257) for the ignition and fuel injection system is equipped with a fault memory.

If faults occur in the sensors and components being monitored, they will be stored in the fault memory together with an indication of the type of fault.

The stored faults are output after initiating the fault display => Page 3 .

This fault memory must be erased once the faults have been eliminated => Page 6 .

A fault relating to the function of the Lambda control system can only be interrogated after a test drive of at least 10 minutes duration.

Faults which can be attributed to a tempory open circuit in the wiring or a loose contact, will also be stored. These faults will be displayed as sporadic faults "SP" and are automatically cancelled if they are not repeated after 10 engine starts.

1.3 - Technical data of self diagnosis

Equipped with

- Fault memory: Non-volatile memory and volatile memory1)
- Rapid data transfer

1) Will be cancelled after 10th engine start if fault has not occurred again.

Control unit identification

=>Page 2 ; connecting fault reader V.A.G 1551 and selecting engine electronics control unit

Selectable functions

Function	Ignition switched on	Engine idling
02 Interrogate fault memory	-	x
03 Final control diagnosis	x	-
04 Introduction of basic setting	x	x

satelettronica

Function	Ignition switched on	Engine idling
05 Erase fault memory	-	x
06 End output	x	x
08 Read measured value block	x	x
10 Adaption	x	

1.4 - Connecting fault reader V.A.G 1551 and selecting engine electronics control unit

Special tools, testers and auxiliary items

- Fault reader V.A.G 1551 with cable V.A.G 1551/3

Note:

The vehicle system tester V.A.G 1552 can be used instead of the fault reader V.A.G 1551, however a print-out is not possible.

Check conditions

- Fuse 21 OK.
- Battery voltage at least 11 V
- Earth connections on bracket on cylinder head OK.

Work sequence

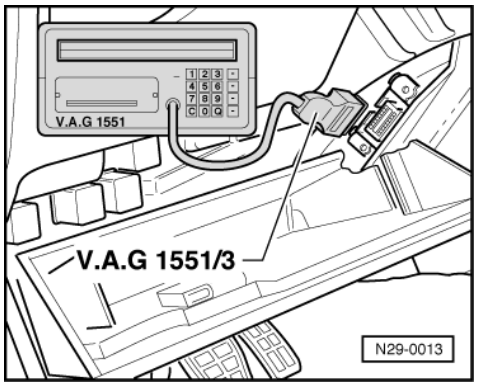

- -> Fold down left shelf.
- Connect fault reader (or vehicle system tester) with cable V.A.G 1551/3.
- Depending upon desired function:
  Switch on ignition
  or
  Start engine => Page 1 , Table "Selectable functions".

Notes:

- If the display does not indicate as described in the work sequence:

=> Fault reader operating instructions

- If due to an input fault "Fault in the data transfer!" is displayed, pull wire off fault reader, reconnect and repeat work step.

- Operate fault reader taking into account the information on the display:
- Input 1 for "Rapid data transfer".

Protected by copyright. Copying for private or commercial purposes, in part or in whole, is not permitted unless authorised by Volkswagen AG. Volkswagen AG does not guarantee or accept any liability with respect to the correctness of information in this document. Copyright by Volkswagen AG.
satelettronica

- Input 01 for address word "Engine electronics" and confirm with Q.

-> The fault reader V.A.G 1551 display will show the control unit identification, e.g.:

```
032906026B 1.6l     R4 MONO     1.3
D35     □
Coding 00
```

- 032 906 026B = Part No. of the control unit
- R4 = Type of engine (4 Cyl. in-line engine)
- 1.6 ltr. = Engine capacity
- MONO 1.3 = System designation and version
- D35 = Programme level number
- Coding 00 = Coding variants

- Press ⇒ key.

-> Indicated on display:

```
Rapid data transfer     HELP
Select function XX
```

- Further measures see repair procedures.

1.5 - Interrogating fault memory

Special tools, testers and auxiliary items

- Fault reader V.A.G 1551 (or vehicle system tester V.A.G 1552) with cable V.A.G 1551/3

Work sequence

- Connect fault reader V.A.G 1551 (V.A.G 1552) and select engine electronics control unit (address word 01); selection is carried out with engine idling.
  => Page 2

Only when engine does not start:

- Operate starter for approx. 6 seconds and then do not switch off the ignition.

- Switch on printer with the Print button (Warning lamp in button lights up).

-> Indicated on display:

```
Rapid data transfer     HELP
Select function XX
```

- Operate fault reader taking into account the information on the display:
- Input 02 for "Interrogate fault memory" function and confirm with Q.

-> The number of faults stored or "No fault recognised!" will be shown on the display.

```
X Faults recognised!
```

If one or more faults are stored:

The faults stored will be displayed and printed out one after the other.
Then the display will show:

If no fault is stored:

- Press ⇒ key.

Protected by copyright. Copying for private or commercial purposes, in part or in whole, is not permitted unless authorised by Volkswagen AG. Volkswagen AG does not guarantee or accept any liability with respect to the correctness of information in this document. Copyright by Volkswagen AG.
satelettronica

- Input 06 for "End output" function and confirm with Q.
- Locate and eliminate faults printed out as per fault table => Page 4 .

Note:

The fault table is arranged according to the 5 digit fault code.

- Erasing fault memory => Page 6

Note:

If a fault is present which is not recognised by the self diagnosis, carry out further fault finding using the fault table in "Engine fault finding" binder.

1.6 - Fault table

Notes:

- The fault table is listed according to the 5 digit fault code on the left.
- Explanation of the fault types (e.g. "open circuit/short circuit to earth"):

=> Fault reader operating instructions

- Before renewing components indicated as being faulty, check the wiring and connectors to these components as well as the earth connections using current flow diagram. This is particularly relevant if faults are output as "occurring sporadically" (SP).

V.A.G 1551 print-out	Possible fault cause	Fault elimination
No fault recognised!	If a fault is present: Fault not recognised by self diagnosis	Continue fault finding using fault table in "Engine fault finding" binder.
00282 Speed sender G68 no signal	Speedometer (G21) defective	- Check speed signal =>Page 53
	Wiring open circuit	
	If no display appears on speedometer: Speedometer sender (G22) defective	- Continue fault finding according to MFI fault finding programme in "Current flow diagram, Electrical fault finding and Fitting locations" binder.
00282 Throttle valve positioner V60 implausible signal	Wiring open circuit	- Check V60 =>Page 38
	V60 defective	

V.A.G 1551 print-out	Possible fault cause	Fault elimination
00515 Hall sender G40 no signal	G40 defective	- Check G40 =>Page 72
	Wiring open circuit	
Signal outside the tolerance	Transfer resistance or loose contacts in the wiring	- Check wiring and wiring connections according to current flow diagram
00516 Idling switch F60 Short to earth	F60 defective, always closed	- Check F60 =>Page 40
	Wiring has short to earth	
Open circuit/short circuit to positive	F60 defective, always open	- Check F60 =>Page 40
	Wiring open circuit	

Protected by copyright. Copying for private or commercial purposes, in part or in whole, is not permitted unless authorised by Volkswagen AG. Volkswagen AG does not guarantee or accept any liability with respect to the correctness of information in this document. Copyright by Volkswagen AG.
satelettronica

V.A.G 1551 print-out	Possible fault cause	Fault elimination
	Accelerator cable incorrectly adjusted	- Adjust accelerator cable => Repair Group 20, Removing and installing parts of the fuel supply system, adjusting accelerator cable

V.A.G 1551 print-out	Possible fault cause	Fault elimination
00518 Throttle valve potentiometer G69		
Short to earth	Wiring/G69 has short to earth	- Check G69 => Page 44
Open circuit/short to earth	Wiring open circuit	
	G69 defective	
Open circuit/short to earth	Wiring open circuit	
	G69 defective	
Short to positive	Wiring open circuit	
	G69 defective	
implausible signal	G69 defective	

V.A.G 1551 print-out	Possible fault cause	Fault elimination
00522 Coolant temperature sender -G62	G62 defective	- Check G62 =>Page 46
	Wiring has short to earth	
Open circuit/short to positive	G62 defective	
	Wiring open circuit	
implausible signal	G62 defective	
00523 Intake air temperature sender G42	G42 defective	- Check G42 =>Page 48
Short to earth	Wiring has short to earth	
Open circuit/short to positive	G42 defective	
	Wiring open circuit	

V.A.G 1551 print-out	Possible fault cause	Fault elimination
00524 Knock sensor 1 G61	Wiring open circuit/short circuit in sensor wiring	- Check G61 =>Page 76
No signal	G61 defective	- Renew G61 =>Page 68
00525 Lambda probe G39	G39 defective	- Check Lambda probe and Lambda control =>Page 33
No signal	Wiring open circuit	
Short to earth	G39 defective	
	Wiring has short to earth	
Short to positive	G39 defective	
	Wiring has short to positive	

V.A.G 1551 print-out	Possible fault cause	Fault elimination
00537 Lambda control1)	Lambda probe heating defective	- Check probe heating voltage supply =>Page 36
Regulating limit exceeded		- Check probe heating for continuity

Protected by copyright. Copying for private or commercial purposes, in part or in whole, is not permitted unless authorised by Volkswagen AG. Volkswagen AG does not guarantee or accept any liability with respect to the correctness of information in this document. Copyright by Volkswagen AG.
satelettronica

	Exhaust system leaking between cylinder head and catalyst	- Check exhaust system
	Misfiring	- Check ignition part components =>Page 65
	Fuel pressure to low	- Check fuel pressure regulator =>Page 59
Regulating limit not reached	Fuel pressure to high	
	Activated charcoal filter solenoid valve 1 N80 leaking, sticking	- Check N80 =>Page 7 ; Final control diagnosis

1) After repairing the faults the values learnt by the Mono Motronic control unit must be erased => Page 10 ; Erasing values learnt by engine electronics control unit

V.A.G 1551 print-out	Possible fault cause	Fault elimination
00561 Mixture adaption1)	Fuel pressure not OK	- Check fuel pressure regulator =>Page 59
Adaption limit exceeded	Misfiring	- Check ignition part components =>Page 65
Adaption limit not reached	Exhaust system leaking between cylinder head and catalyst	- Check exhaust system
00670 Throttle valve positioner sender G127	G127 defective	- Check G127 =>Page 72
no signal	Wiring open circuit	

1) After repairing the faults the values learnt by the Mono Motronic control unit must be erased => Page 10 ; Erasing values learnt by engine electronics control unit

V.A.G 1551 print-out	Possible fault cause	Fault elimination
17978 Engine control unit blocked	The electronic immobilizer control unit (J362) has blocked the Mono Motronic control unit	- Match the engine electronic control unit to the electronic immobilizer Check electronic immobilizer: => Repair group 96; Servicing electronic immobilizer Then start engine and erase the engine control unit fault memory
65535 Control unit defective	Components in Mono Motronic control unit (J257)	- Renew J257 =>Page 19 , item 10

1.7 - Erasing fault memory

Special tools, testers and auxiliary items

- Fault reader V.A.G 1551 (or vehicle systems tester V.A.G 1552) with cable V.A.G 1551/3

Test conditions

- Fault eliminated

Work sequence

- Carry out road test of at least 10 minutes duration.
  When doing this

Protected by copyright. Copying for private or commercial purposes, in part or in whole, is not permitted unless authorised by Volkswagen AG. Volkswagen AG does not guarantee or accept any liability with respect to the correctness of information in this document.
satelettronica

- The coolant temperature must reach at least 80 °C,
- The engine speed must be increased to at least 3000 rpm,
- The accelerator pedal must be floored briefly.

- Connect fault reader V.A.G 1551 (V.A.G 1552) and select engine electronics control unit (address word 01); selection is carried out with engine idling.
  => Page 2

-> Indicated on display:

```
Rapid data transfer      HELP
Select function XX
```

- Input 02 for "Interrogate fault memory" function and confirm with Q.

```
Rapid data transfer      HELP
Select function XX
```

-> Press ⇒key until all faults still stored have been displayed and the display reads:

- Input 05 for "Erase fault memory" function and confirm with Q.

-> Indicated on display:

```
Rapid data transfer
Fault memory is erased!
```

- Press ⇒ key.

-> Indicated on display:

```
Rapid data transfer      HELP
Select function XX
```

- Input 06 for "End output" function and confirm with Q.
- Carry out a further road test and interrogate fault memory again. No faults should be shown.

1.8 - Final control diagnosis

The final control diagnosis activates the following components in the stated sequence:

1. Throttle valve positioner (V60)

2. Intake air preheating relay (J81)

3. Activated charcoal filter solenoid valve 1 (N80)

Additionally for engine codes AEA and ADX only:

4. Fuel pump relay (J17)

5. Injector (N181)

Special tools, testers and auxiliary items

- Fault reader V.A.G 1551 or vehicle system tester V.A.G 1552 with cable V.A.G 1551/3
- Test box V.A.G 1598/18
- Hand multimeter V.A.G 1526 or multimeter V.A.G 1715
- Diode test lamp V.A.G 1527
- Adapter set V.A.G 1594
- Current flow diagram

Check conditions

- Throttle valve potentiometer (G69) OK.
- Fuse 18 and 21 OK.

Protected by copyright. Copying for private or commercial purposes, in part or in whole, is not permitted unless authorised by Volkswagen AG. Volkswagen AG does not guarantee or accept any liability with respect to the correctness of information in this document. Copyright by Volkswagen AG.
satelettronica

Work sequence

Note:

If the final control diagnosis is to be repeated without the engine being started in between time, switch ignition off for approx. 20 seconds.

- Remove air cleaner cover.
- Connect fault reader V.A.G 1551 (V.A.G 1552) and select engine electronics control unit (address word 01); carry out selection with ignition switched on. => Page 2

-> Indicated on display:

```
Rapid data transfer      HELP
Select function XX
```

- Operate fault reader taking into account the information on the display:
- Input 03 for "Final control diagnosis" function.

-> Indicated on display:

```
Rapid data transfer      Q
03 Final control diagnosis
```

Activate throttle valve positioner (V60):

- Confirm input with Q button.

-> Indicated on display:

```
Final control diagnosis
Throttle valve positioner-V60
```

The throttle valve positioner plunger must move in and out until switching to the next final control by pressing the ⇒button.

If the throttle valve positioner does not move:

- Check activation =>Page 38

Activate intake manifold preheating relay (J81):

- Press ⇒key.

-> Indicated on display:

```
Final control diagnosis
Intake air preheating relay-J81
```

The intake air preheating relay (above the relay plate) must click until switching to the next final control by pressing the ⇒button.

If the relay does not click:

- Check intake air preheating relay:

=> Current flow diagrams, Electrical fault finding and Fitting locations

Activate solenoid valve 1 for activated charcoal filter (N80):

- Press ⇒ button.

-> Indicated on display:

```
Final control diagnosis
Activ. charcoal filter solenoid valve
1      -N80
```

Protected by copyright. Copyright Volkswagen AG. Volkswagen AG does not guarantee or accept any liability with respect to the correctness of information in this document. Copyright Volkswagen AG. Copying for private or commercial purposes, in part or in whole is not permitted unless authorised by Volkswagen AG.
satelettronica

The solenoid valve (right wheel housing) must click until switching to the next final control by pressing the ⇒key (for engine code AEV the final control diagnosis is completed).

If the solenoid valve does not click:

- Continue check => Page 9 .

Actuate fuel pump relay (J17):

- Press ⇒key.

-> Indicated on display:

```
Final control diagnosis
Fuel pump relay J17
```

The fuel pump relay (on the relay plate with fuse box, relay position 12) must click until switching to the next final control by pressing the ⇒button.

Note:

During the activation of the fuel pump relay the fuel pump must be heard to run at intervals.

If the relay does not click:

- Check fuel pump relay:

=> Current flow diagrams, Electrical fault finding and Fitting locations, Fuel supply system

Injector (N181) must activate:

- Press ⇒key.

-> Indicated on display:

```
Final control diagnosis
Injector -N181
```

The injector must be activated once. Fuel must also be visible briefly on the throttle valve.

Note:

A repeat of the injector check is only possible if the engine is run in between.

Valve does not open:

- Check activation => Page 52 .
- Press ⇒ key to end the final control diagnosis.

-> Indicated on display:

```
Function is not recognized or cannot
□
be carried out at the moment!
```

- Press ⇒ key again.

Note:

After completion of the final control diagnosis input 06 for "End output" function and confirm with Q.

Continuation of check when the activated charcoal filter solenoid 1 does not click:

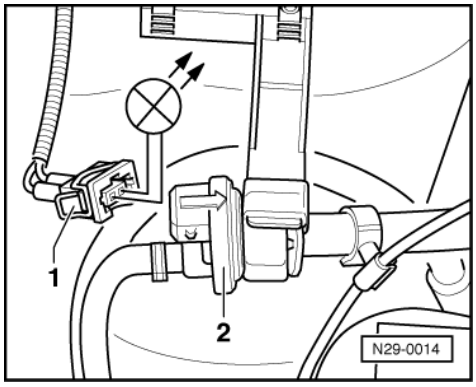

Protected by copyright. Copying for private or commercial purposes, in part or whole is not permitted unless authorised by Volkswagen AG. Volkswagen AG does not guarantee or accept any liability with respect to the correctness of information in this document. Copyright by Volkswagen AG.
satelettronica

- -> Pull connector -1- off valve -2- and connect diode test lamp V.A.G 1527 with aux. cables from V.A.G 1594 to disconnected connector.
  The LED must flash

LED flashes:

- Proceed with final control diagnosis until completed.
- Switch off ignition
- Renew solenoid valve.

LED does not flash:

- Continue with final control diagnosis to end.
- Switch off ignition

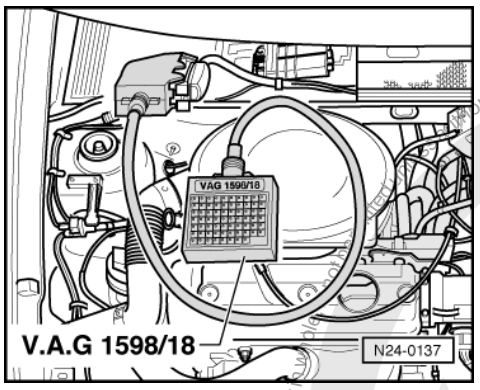

- -> Connect test box V.A.G 1598/18 to control unit wiring loom.
- Check wire between test box socket 1+2 pin connector contact 1 according to current flow diagram for open circuit.
  Wire resistance: max. 1.5 ω
- Also check wire for short to battery positive and earth.
  Specification: ∞ω
- Check wire between 2 pin connector contact 2 and relay plate according to current flow diagram for open circuit.
  Wire resistance: max. 1.5 ω

If no wiring fault is detected:

- Renew Mono Motronic control unit (J257)
  =>Page 19 , item 10 .

1.9 - Erasing values learnt by engine electronics control unit

Special tools, testers and auxiliary items

- Fault reader V.A.G 1551 or vehicle system tester V.A.G 1552 with cable V.A.G 1551/3

Work sequence

- Connect fault reader V.A.G 1551 (V.A.G 1552) and select engine electronics control unit (address word 01); carry out selection with ignition switched on. => Page 2

-> Indicated on display:

```
Rapid data transfer      HELP
Select function XX
```

- Operate fault reader taking into account the information on the display:

Protected by copyright. Copyright by Volkswagen AG.
Copyrighted by Volkswagen AG. Volkswagen AG does not guarantee or accept any liability with respect to the correctness of information in this document.
satelettronica

- Input 10 for "Adaption" function and confirm with Q.

-> Indicated on display:

```
Adaption
Feed in channel number XX
```

- Input 00 for channel number 0 and confirm with Q.

-> Indicated on display:

```
Adaption     Q
Erase learnt values?
```

- Confirm entry by pressing Qkey.

-> Indicated on display:

```
Adaption
Learnt values have been erased
```

- Conclude adaption by pressing ⇒ key.

1.10 - Read measured value block and basic settings

The measured values in the functions read measured value block and basic setting are described during the individual component test. This table serves only as an overview.

Note:

To change to another display group proceed as follows:

Display group	V.A.G 1551	V.A.G 1552
Higher	Press key 3	Press ↑key
Lower	Press key 1	Press ↓key

1.11 - Display group overview

Note:

The specifications are only valid when the test conditions listed in the table have been fulfilled.

Display group 00 (decimal displayed figure)											
Test conditions ▪ Engine running at idling speed ▪ Coolant temperature at least 80 °C ▪ Electrical consumers switched off											
Display zones											Specification
1	2	3	4	5	6	7	8	9	10	Adaption figure for activ. charcoal filter system	---
									Battery voltage	AEV ADX, AEA	150...180 140...170
								Rpm regulator for idling stabilization			0...25
							Adaption figure for basic air requirement				250...255 or 0...10
						Adaption figure for mixture correction				AEV, ADX AEA	230...255 or 0...30 220...255 or 0...30

Protected by copyright. Copying for private or commercial purposes, in whole or in part, is not permitted unless authorised by Volkswagen AG. Volkswagen AG does not guarantee or accept any liability with respect to the correctness of information in this document. Copyright by Volkswagen AG.

satelettronica

Lambda integrator	90...170
Intake air temperature	88...45
Engine rpm	30...34
Throttle valve potentiometer - path 1	10...70
Coolant temperature	22...11

Display group 00 (decimal displayed value)

- Engine not running, ignition switched on

Display zones

1	Coolant temperature
2	Throttle valve potentiometer -path 1
3	Throttle valve potentiometer -path 2
4	Idling switch
5	Adaption value for activated charcoal filter valve
6	Adaption value for mixture correction
7	Adaption value for basic air requirement
8	Adaption value for idling speed stabilization
9	Battery voltage
10	Adaption value for activated charcoal filter system

	Display zones			
	1	2	3	4
Display group 01 -Idling test-				
Display	0...xxxx rpm	-xx.x...xxx.x °C	0.x.x... 1.xx	xxxxxxxx
Indicated	Engine speed	Coolant temperature	Lambda correction factor	Operating conditions2)
Display group 02 -Injection period, intake air temperature-				
Display	0...xxxx rpm	0.0...xxx.x ms	0.0...xx.x V	-xx.x...xxx.x °C
Indicated	Engine speed	Injection period	Battery voltage	Intake air temperature
Display group 03 -Engine load condition-				
Display	0...xxxx rpm	0...xxx %	0...xxx <°	-xx.x° before TDC...xx.x° after TDC
Indicated	Engine speed	Engine load signal	Throttle valve angle (calculated figure, dependent on throttle valve potentiometer)	Ignition timing figure (calculated figure, dependent on the ignition timing adjustment)

1) Relevance of figures in 8 digit number block => Page 13 .

	Display zones			
	1	2	3	4
Display group 04 -Operating conditions-				
Display	0...xxxx rpm	0...xxx %	0,>4>,>7	xxxxxxxx
Indicated	Engine speed	Engine load signal	Speed	Operating condition1)
Display group 05 -Mixture regulation-				
Display	0...xxxx rpm	0...xxx %	0.xx...1.xx	-xx.x...xx.x %
Indicated	Engine speed	Duty cycle from activated charcoal filter solenoid valve 1	Lambda correction factor	Mixture correction factor
Display group 06 -Activated charcoal filter system-				
Display	0...xxxx rpm	0...xxx %	0.xx...1.xx	-xx.x...xx.x %

satelettronica

	Display zones			
Indicated	Engine speed	Duty cycle from activated charcoal filter solenoid valve 1	Lambda correction factor	Mixture correction factor

1) Relevance of figures in 8 digit number block => Page 13 .

	Display zones			
	1	2	3	4
Display group 07 -Lambda control-				
Display	0...xxxx rpm	0.000...xx.xxx V	0.xx...1.x.x	xxxxxxxx
Indicated	Engine speed	Lambda probe voltage	Lambda correction factor	Operating condition1)
Display group 08 -Knock control-				
Display	0...xxxx rpm	0.00...xx.xx ms	0.0...xx.x °CA	0.0...xx.x °CA
Indicated	Engine speed	Load	Knock control No. 1 cyl., ignition retardation	Knock control No. 2 cyl., ignition retardation
Display group 09 -Knock control-				
Display	0...xxxx rpm	0.00...xx.xx ms	0.0...xx.x °CA	0.0...xx.x °CA
Indicated	Engine speed	Load	Knock control No. 3 Cyl., ignition retardation	Knock control No. 4 cyl., ignition retardation

1) Relevance of figures in 8 digit number block => Page 13 .

	Display zones			
	1	2	3	4
Display group 10 -Knock control-				
Display	0...xxxx rpm	0.00...xx.xx ms	0.000...xx.xxx V	0.000...xx.xxx V
Indicated	Engine speed	Load	Integral knock No. 1 Cyl.	Integral knock No. 2 Cyl.
Display group 11 -Knock control-				
Display	0...xxxx rpm	0.00...xx.xx ms	0.000...xx.xxx V	0.000...xx.xxx V
Indicated	Engine speed	Load	Integral knock No. 3 Cyl.	Integral knock No. 4 Cyl.

Significance of figures in 8 digit number block

Relevance when displayed digit = 1										
x	x	x	x	x	x	x	x	Display group 01	Display group 04	Display group 07
1								No. 1 Cyl. recognised	---	---
	1							Idling switch closed	---	Activated charcoal filter system solenoid valve 1 active
		1						Automatic gearbox recognised1)	---	Lambda control active
			1					Air conditioner compressor switched on	Acceleration or full load enrichment	Acceleration or full load enrichment
				1				Air conditioner switched on	Full load recognised	Full load recognised
					1			Speed boost gear engaged1)	Part load recognised	Part load recognised
						1		Torque reduction3)	Idling switch closed	Idling switch closed

satelettronica
Protected by copyright. Copying for private or commercial purposes, in part or in whole, is not permitted unless authorised by Volkswagen AG. Volkswagen AG does not guarantee or accept any liability with respect to the correctness of information in this document. Copyright by Volkswagen AG.

Relevance when displayed digit = 1									
							1	Gear engaged2)	Overrun cut-off active	Overrun cut-off active

1) A 1 must not be displayed.

2) If a 1 is displayed, the wiring from control unit contact 12 to earth has open circuit.

3) Display must always show 1.

Protected by copyright. Copying for private or commercial purposes, in part or in whole, is not permitted unless authorised by Volkswagen AG. Volkswagen AG does not guarantee or accept any liability with respect to the correctness of information in this document. Copyright by Volkswagen AG.

satelettronica

24 - Mixture preparation, Injection

1 - Mono-Motronic injection and ignition system

1.1 - Mono-Motronic injection and ignition system

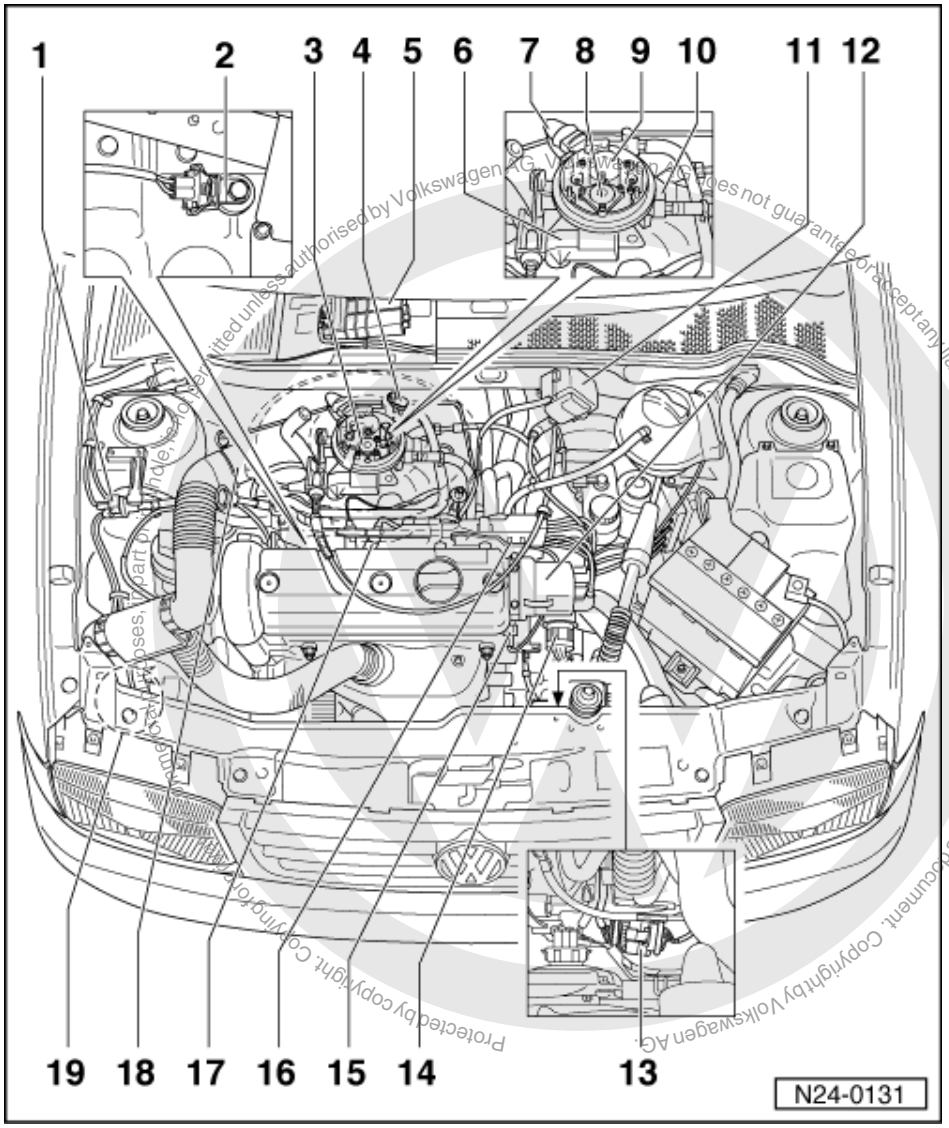

1.2 - Fitting locations overview

1 Activated charcoal filter solenoid valve 1 (N80)
- Activated charcoal filter system

=> Repair group 20, removing and installing parts of the fuel supply system, removing and installing parts of the activated charcoal filter system

2 Knock sensor 1 (G61)
- Engine codes ADX, AEA only
- =>Page 68

satelettronica

3 Injection unit
4 Temperature regulator
- For intake air preheating

5 Mono Motronic injection and ignition system control unit (J257)

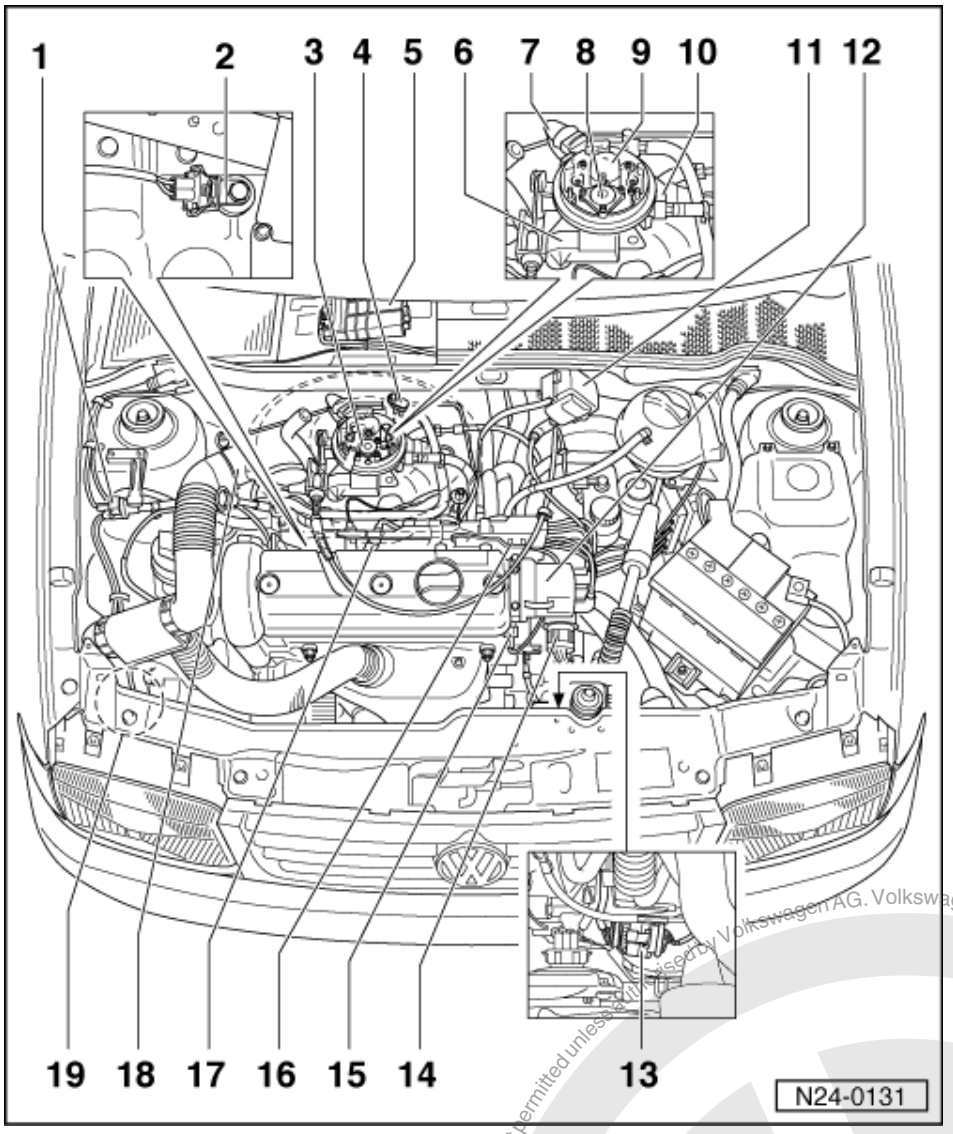

6 Throttle valve positioner (V60) with idling switch (F60)
7 Connector
- For injector and intake air temperature sender

8 Fuel pressure regulator
9 Injector (N181) with intake air temperature sender (G42)
10 Throttle valve potentiometer (G69)
11 Ignition transformer (N152)
- =>Page 66

12 Distributor
- =>Page 67

13 4 pin connector
- For Lambda probe (G39)

14 Central connector

satelettronica
Protected by copyright. Copying for private or commercial purposes, in part or in whole, is not permitted unless authorised by Volkswagen AG. Volkswagen AG does not guarantee or accept any liability with respect to the correctness of information in this document. Copyright by Volkswagen AG.

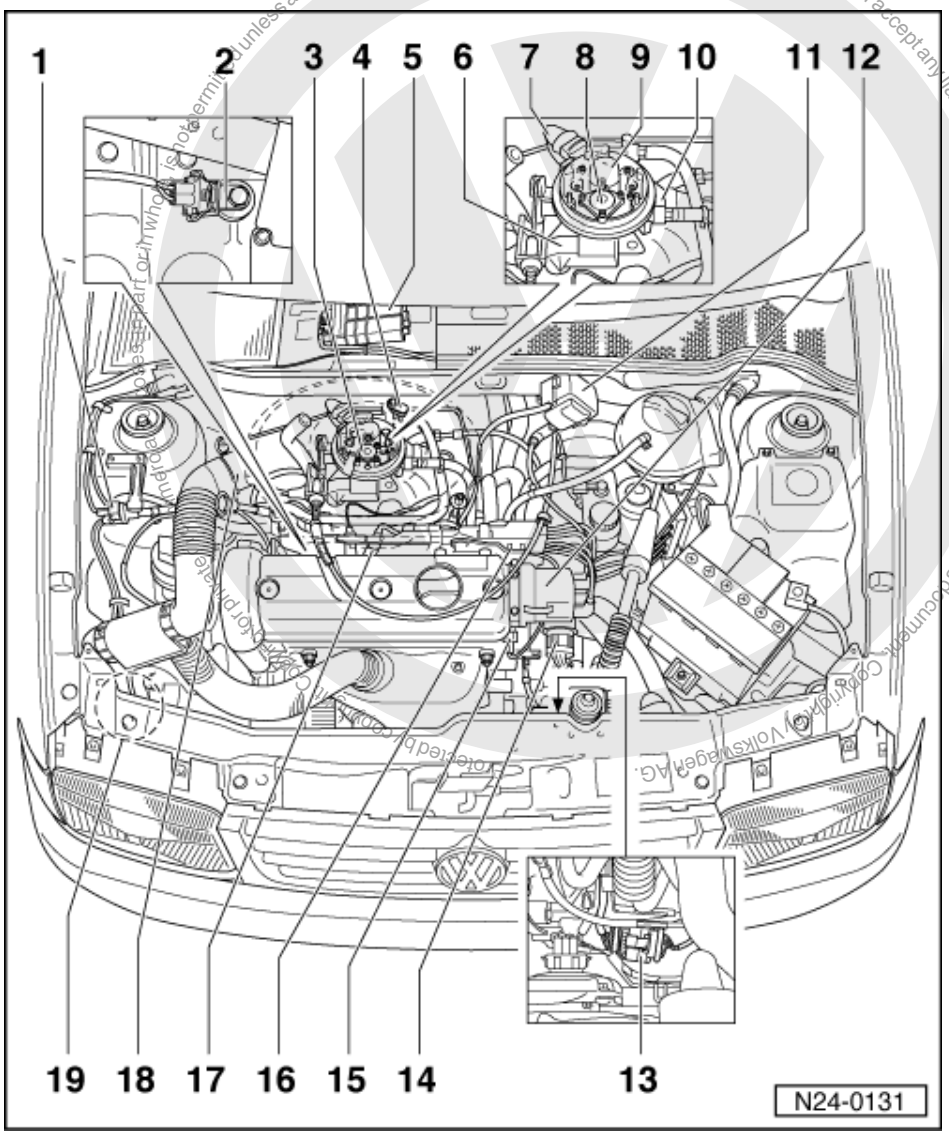

15 Coolant temperature sender (G62)
16 Earth connection
17 Spark plug, 25 Nm
- =>Page 68

18 Air cleaner
19 Activated charcoal filter
- Activated charcoal filter system

=> Repair group 20, removing and installing parts of the fuel supply system, removing and installing parts of the activated charcoal filter system

1.3 - Servicing injection part

Servicing ignition part

=> Repair group 28

satelettronica

Notes:

- The control unit for the fuel injection and ignition system is equipped with a fault memory. Before carrying out repairs, adjustment work and fault finding the fault memory must be interrogated and the vacuum connections checked (outside air).
- Components marked with * are checked via the self diagnosis.
  => Page 3 , interrogating fault memory
- Components marked with ** are checked via the final control control diagnosis => Page 7 .
- Always renew spring-type hose clips with screw-type hose clips.
- For trouble-free operation of the electrical components a voltage of at least 11.5 V is necessary.
- If the engine starts, runs for a short period and then stops, after fault finding, repairs or component tests, then the fault may lie with the immobilizer which is blocking the engine control unit. The fault memory must be interrogated and if necessary the control unit matched => Page 57 .

- During some checks it can happen that the control unit will recognise and store a fault. Therefore after completing all checks and repairs the fault memory must be interrogated and if necessary erased.
  => Page 3 , interrogating fault memory
- Do not use sealants containing silicone. Particles of silicone drawn into the engine, will not be burnt in the engine and damage the Lambda probe.

Safety precautions =>Page 31
Rules for cleanliness => Page 31
Technical data => Page 32
Wire routing/securing the engine wiring loom=>Page 63
Checking intake air system for leaks (unmetered air)=> Page 61 .

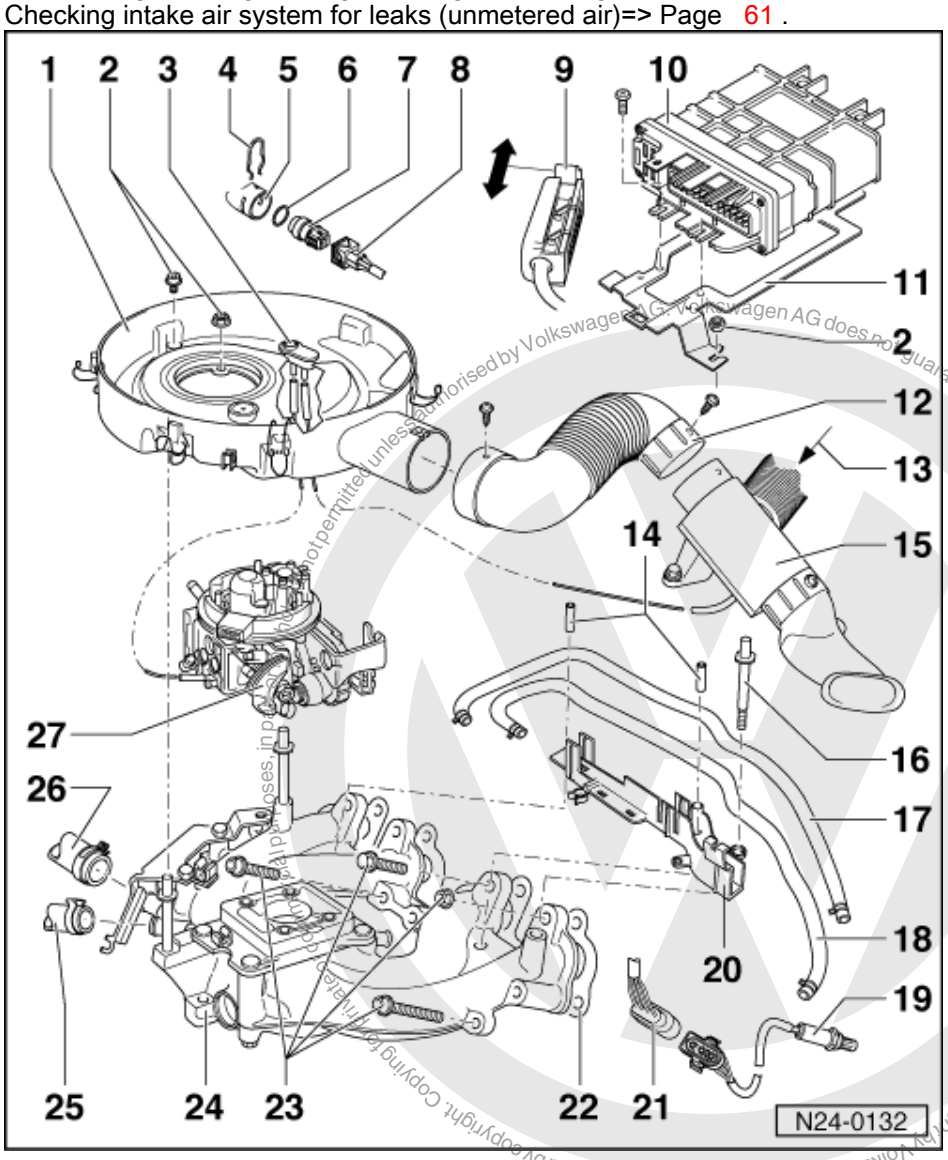

Protected by copyright. Copying for private or commercial purposes, in part or in whole, is not permitted unless authorised by Volkswagen AG. Volkswagen AG does not guarantee or accept any liability with respect to the correctness of information in this document. Copyright by Volkswagen AG.
satelettronica

1 Air cleaner
- Dismantling and assembling => Page 24

2 10 Nm

3 Temperature regulator
- For intake air preheating

4 Retaining clip

5 Thermostat housing

6 O ring
- Renew

7 Coolant temperature sender (G62)*
- With coolant temperature gauge sender (G2)
- If necessary before removing, release pressure from cooling system
- Checking =>Page 46
- Resistance graph
  =>Page 31 , Fig. 1

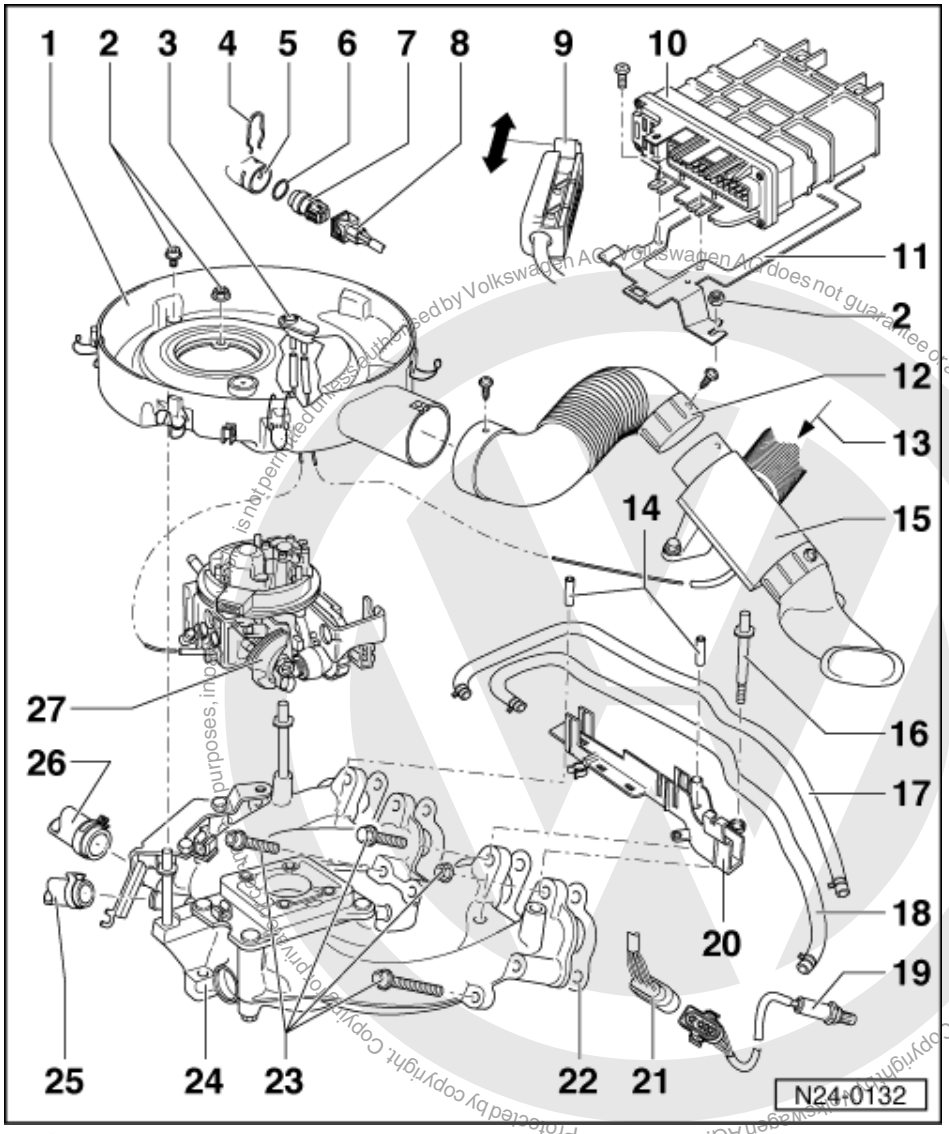

8 Connector

9 Connector
- Only disconnect or connect with ignition switched off
- Unlatch to disconnect

10 Mono Motronic control unit (J257)*
- For injection system, Lambda regulation, activated charcoal filter solenoid valve, speed governing via fuel pump relay, intake air preheating control, ignition and self diagnosis

satelettronica

- Location: in plenum chamber, right
- On replacement, the control unit must be matched to the electronic immobilizer => Page 57

11 Retainer

12 Connecting pipe

Copyright. Copying for private or commercial purposes, in part or in whole, is not permitted unless authorised by Volkswagen AG. Volkswagen AG does not guarantee or accept any liability with respect to the correctness of information in this document. Copyright by Volkswagen AG.

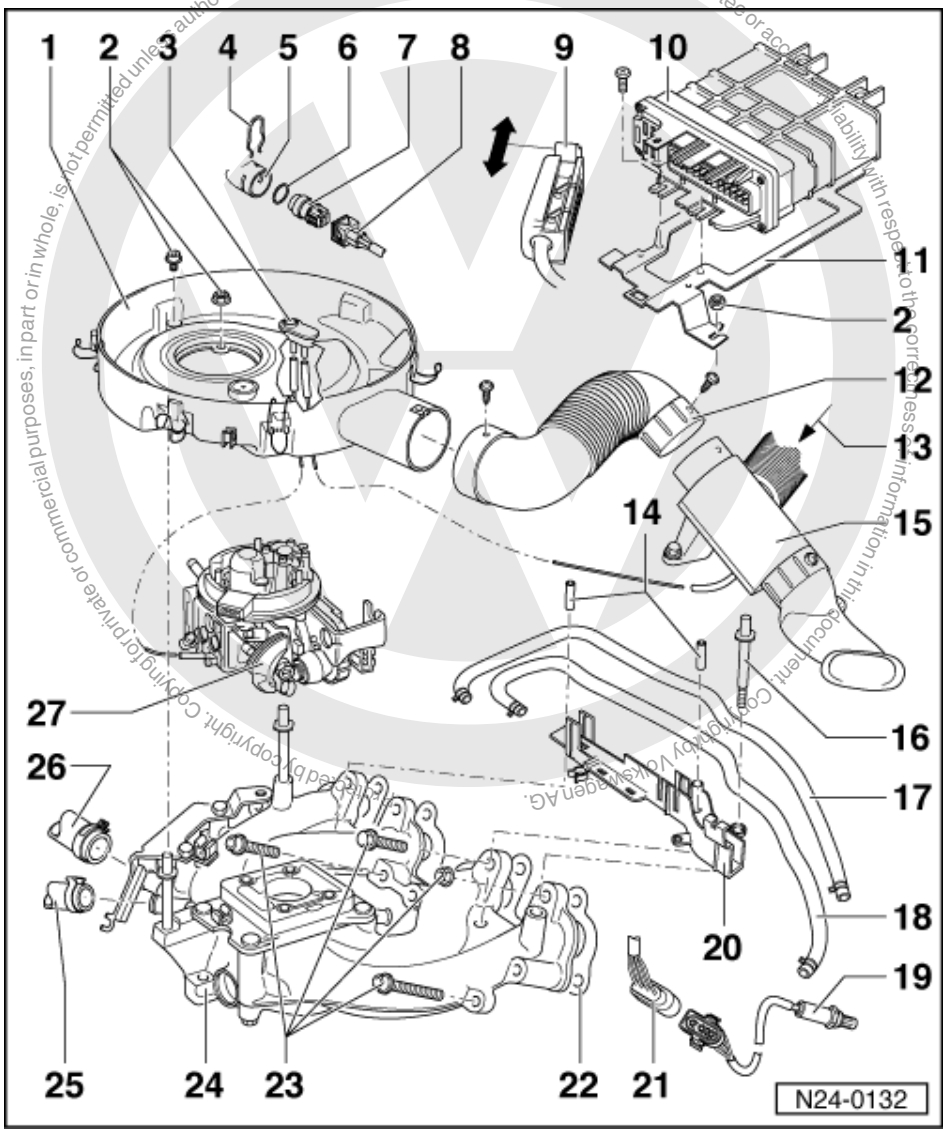

13 Warm air intake

- From warm air collector on exhaust manifold

14 Spreader pin

15 Air intake housing with regulating flap

- For intake air preheating

16 Peg bolt, 15 Nm

17 Supply hose

- Secure with spring-type clips
- White markings
- From fuel filter

18 Return hose

- Secure with spring-type clips
- Blue markings
- To fuel tank

satelettronica

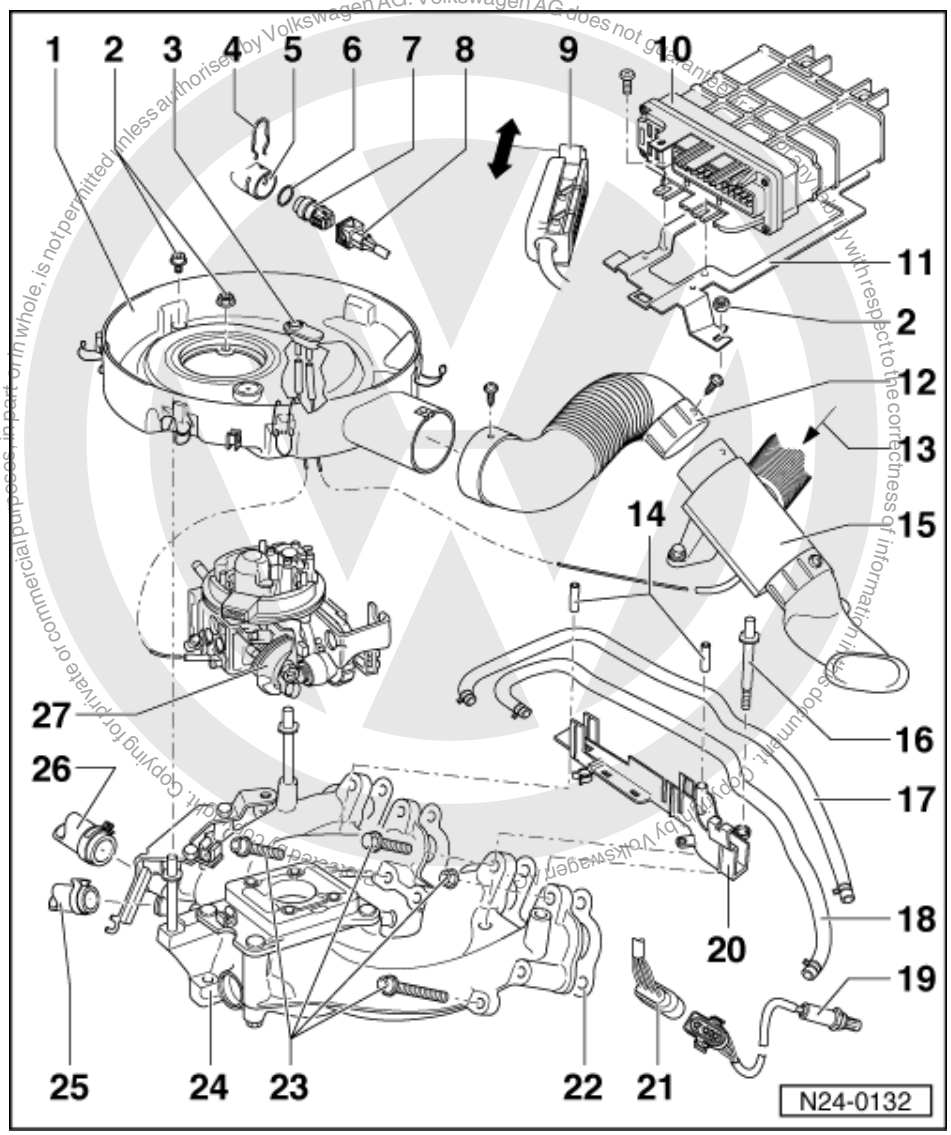

19 Lambda probe (G39)*, 50 Nm

- Location: In front exhaust pipe
- Grease only the threads with "G5"; "G5" must not get into the slots on the probe body
- Checking Lambda probe and Lambda control
  => Page 33
- Checking probe heating voltage supply => Page 36
- Check probe heating for continuity

20 Cable guide

- To remove pull out spreader pin -16- (if necessary screw in self tapping screw to do this)
- Routing of engine wiring loom => Page 63

satelettronica

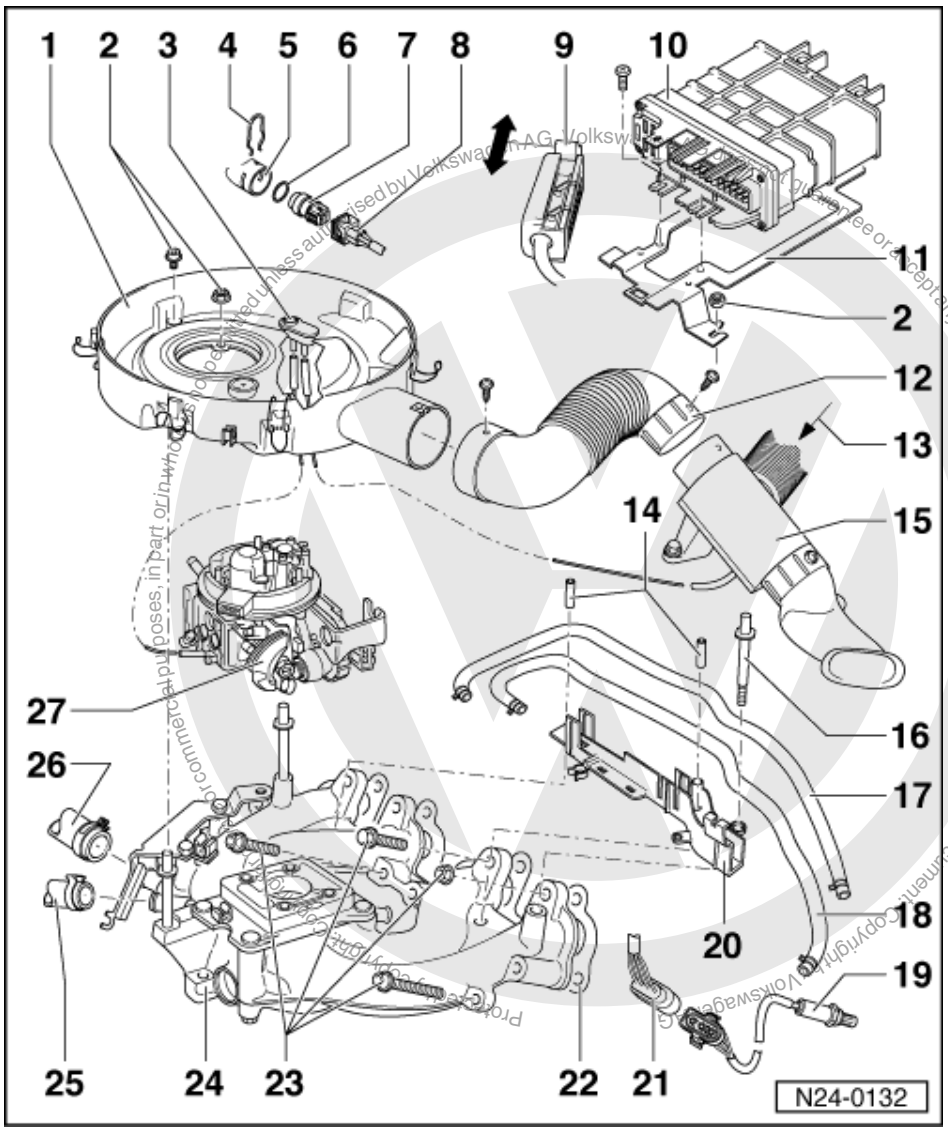

21 4 pin connector
- For Lambda probe and probe heating
- On gearbox bracket
- Lambda probe contacts gold-plated

22 Seal
- Renew

23 25 Nm

24 Intake manifold

25 Vacuum connection
- To brake servo

26 To thermostat housing

27 Injection unit
- Servicing => Page 26

satelettronica

1.4 - Dismantling and assembling intake manifold

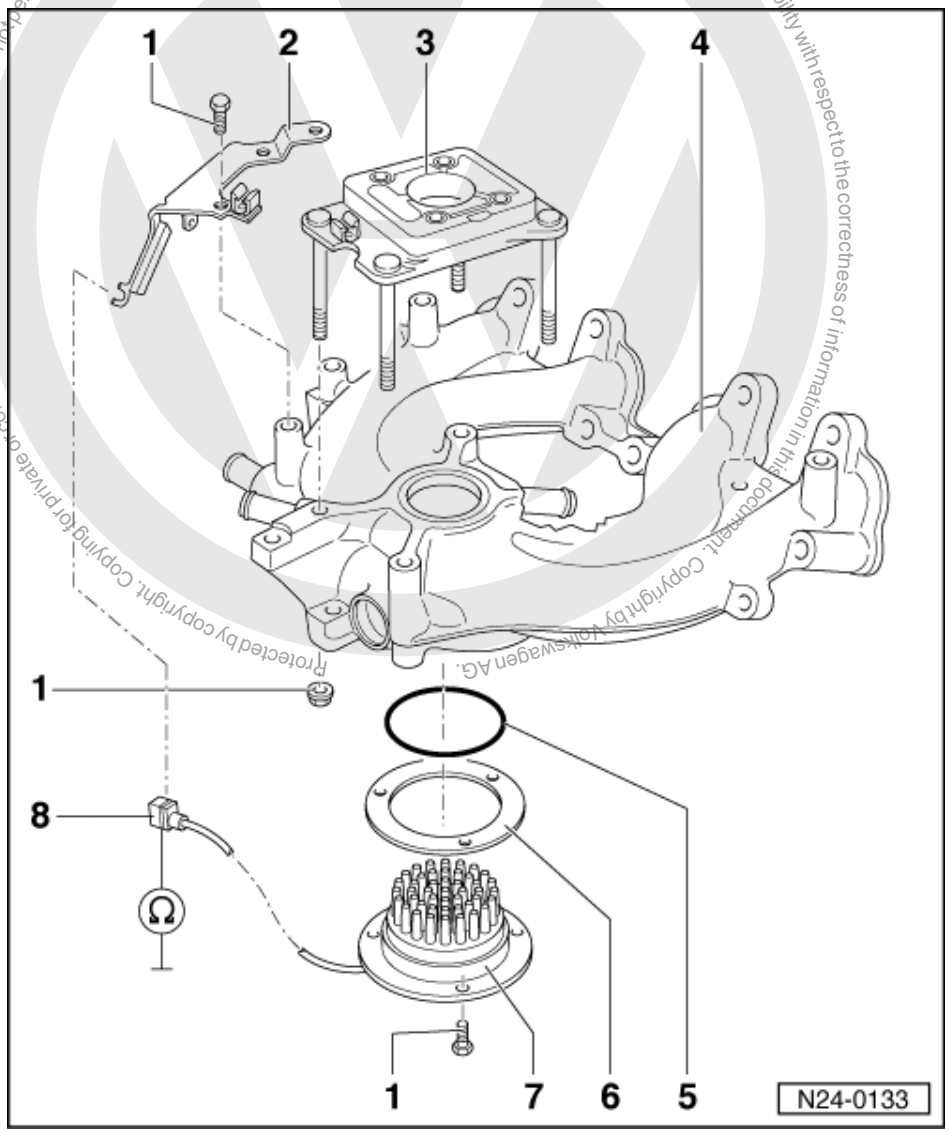

1 10 Nm
2 Bracket
3 Intermediate flange
- Check for cracks and distortion

4 Intake manifold
5 O ring
- Renew if damaged

6 Seal
7 Intake air preheater (N51)
- Test prerequisites: engine cold
- Resistance between plug and earth (-): 0.25...0.50 ω
- Checking activation
  => Page 7 , Final control diagnosis
- Switch-off temperature approx. 60°C

8 Connector

Protected by copyright. Copyright for private or commercial purposes, in part or in whole, is not permitted unless authorised by Volkswagen AG. Volkswagen AG does not guarantee or accept any liability with respect to the correctness of information in this document. Copyright by Volkswagen AG.
satelettronica

1.5 - Dismantling and assembling air cleaner

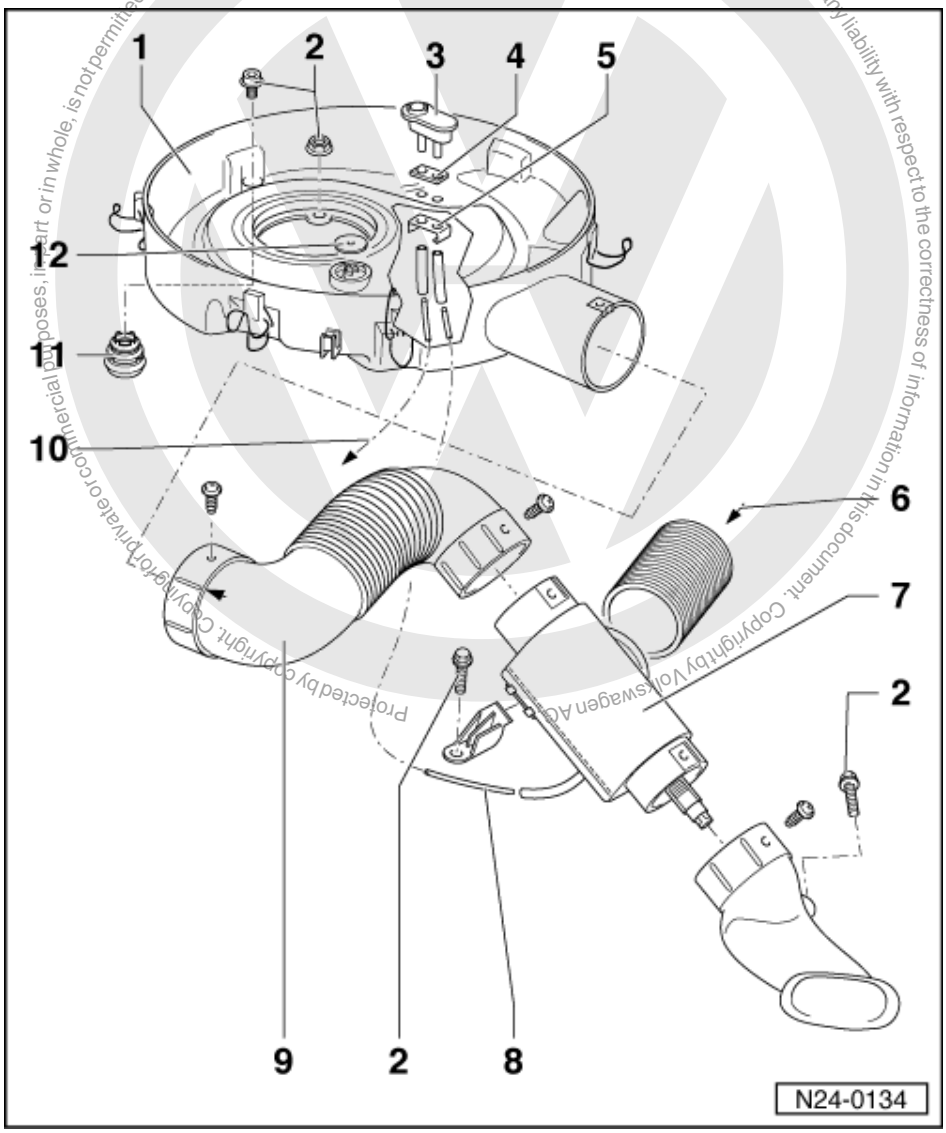

1 Air cleaner housing
2 10 Nm
3 Temperature regulator
- For intake air preheating
- Metal connecting pipe or with notch must be connected to the regulating flap
- Checking intake air preheating =>Page 62

4 Seal
- Renew if damaged

5 Retainer
6 Warm air intake

satelettronica

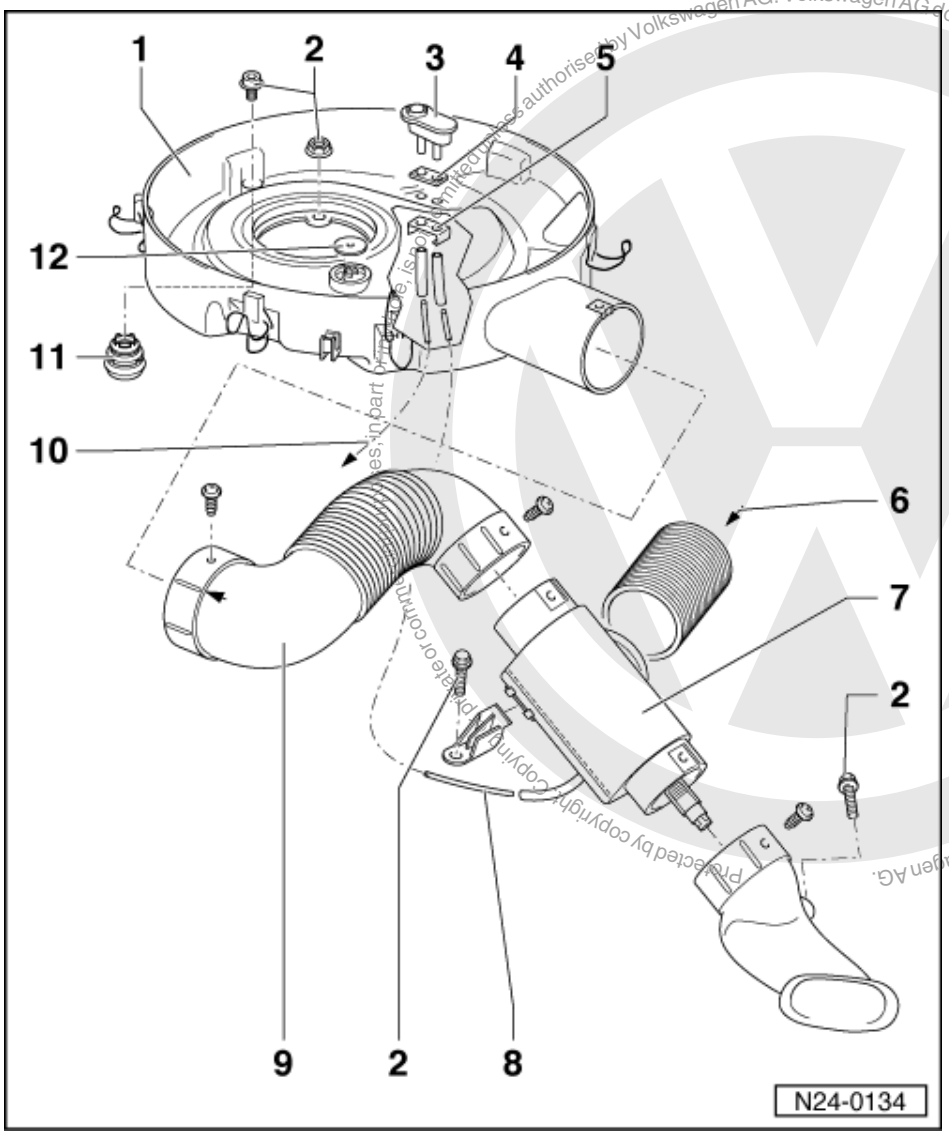

7 Air intake housing with regulating flap
- For intake air preheating
- Checking intake air preheating =>Page 62

8 Vacuum pipe

9 Connecting pipe

10 To injection unit
- => Page 30 , Item 10

11 Grommet

12 Non-return valve

Protected by copyright. Copying for private or commercial purposes, in part or in whole, is not permitted unless authorised by Volkswagen AG. Volkswagen AG does not guarantee or accept any liability with respect to the correctness of information in this document. Copyright by Volkswagen AG.
satelettronica

1.6 - Servicing injection unit

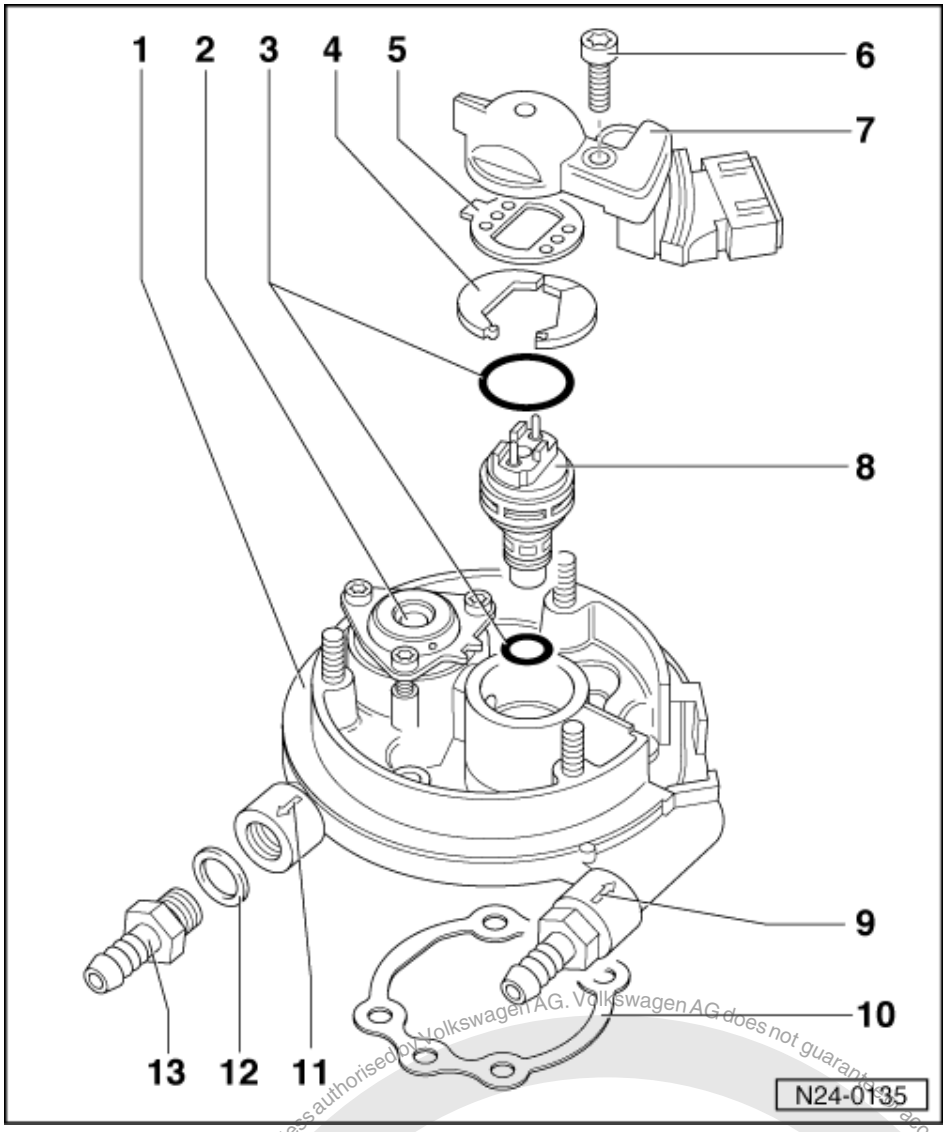

Servicing upper part

1 Injection unit upper part
- Note fitting position

2 Fuel pressure regulator
- Checking fuel pressure regulator and holding pressure => Page 59

3 O ring
- Renew

4 Securing washer
- Remove to install O-ring

5 Seal
- Renew

6 5 Nm
- Install with D6

Protected by copyright. Copying for private or commercial purposes, in part or in whole, is not permitted unless authorised by Volkswagen AG. Volkswagen AG does not guarantee or accept any liability with respect to the correctness of information in this document. Copyright by Volkswagen AG.
satelettronica

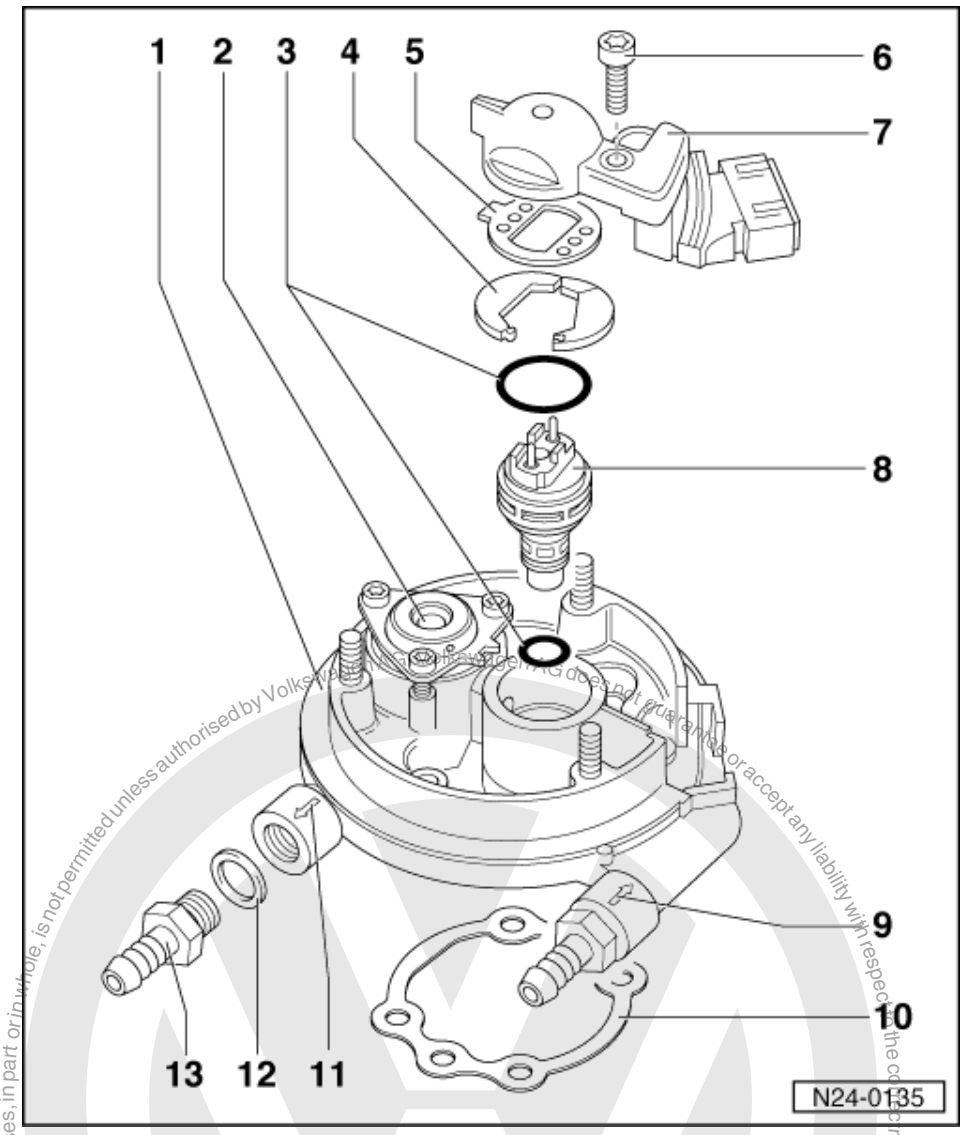

7 Retainer for injector with intake air temperature sender (G42)*
- Checking intake air temperature sender =>Page 48
- Resistance graph
  =>Page 31 , Fig. 1

8 Injector (N181)
- Checking =>Page 51

9 Fuel supply

10 Seal
- Renew

11 Fuel return

12 Seal
- Renew

13 Connection

Protected by copyright. Copyright by Volkswagen AG.
Copyright by Volkswagen AG, in part or in whole, is not permitted unless authorised by Volkswagen AG. Volkswagen AG does not guarantee or accept any liability with respect to the correctness of information in this document.
satelettronica

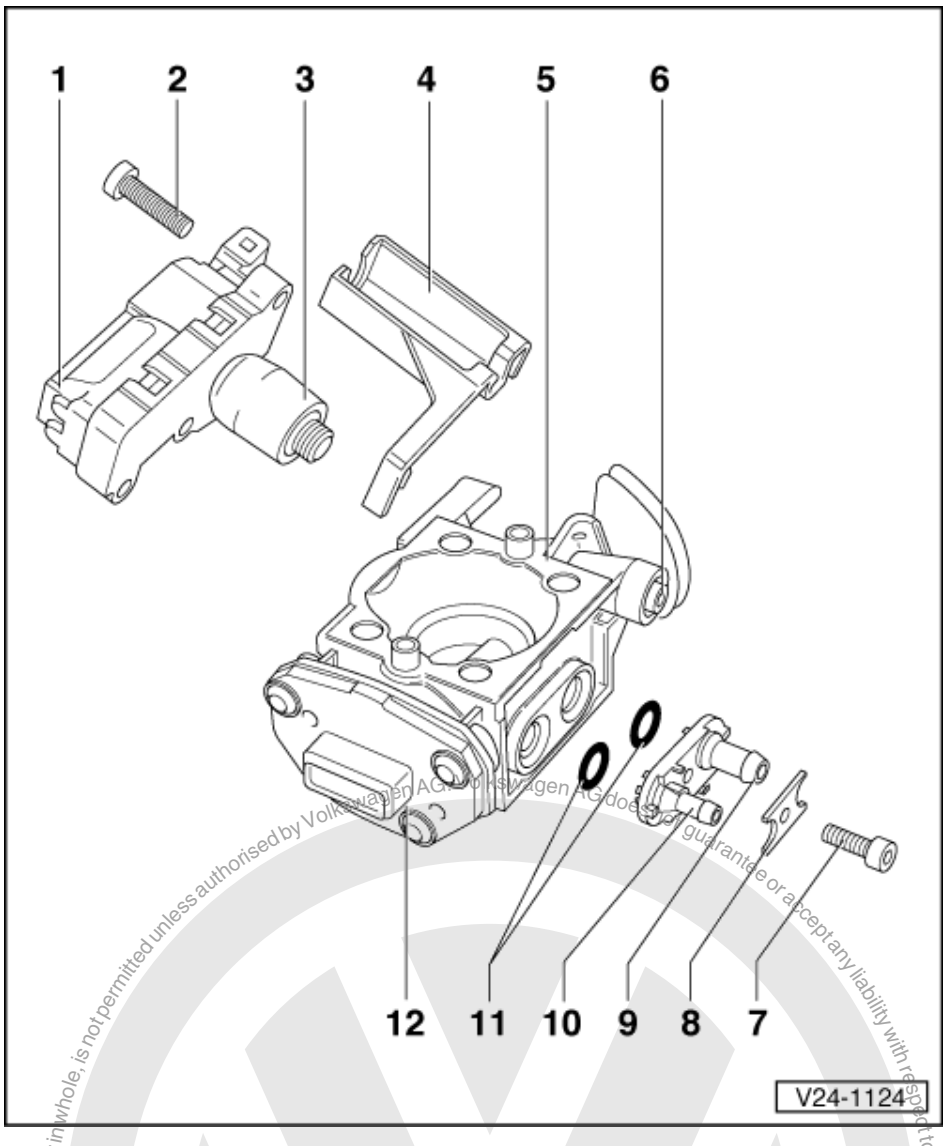

Servicing lower part

1 Throttle valve positioner (V60)*/**
- With idling switch (F60)*
- Checking =>Page 38
- When installing ensure that idling switch can only be operated via switch plastic plate with stop screw. If necessary loosen bracket -4- and align.
- Check idling after renewing the idling switch =>Page 40
- With throttle valve positioner sender (G127)*; Checking sender =>Page 43

2 6 Nm

Protected by copyright. Copying for private or commercial purposes, in part or in whole, is not permitted unless authorised by Volkswagen AG. Volkswagen AG does not guarantee or accept any liability with respect to the correctness of information in this document. Copyright by Volkswagen AG.

satelettronica

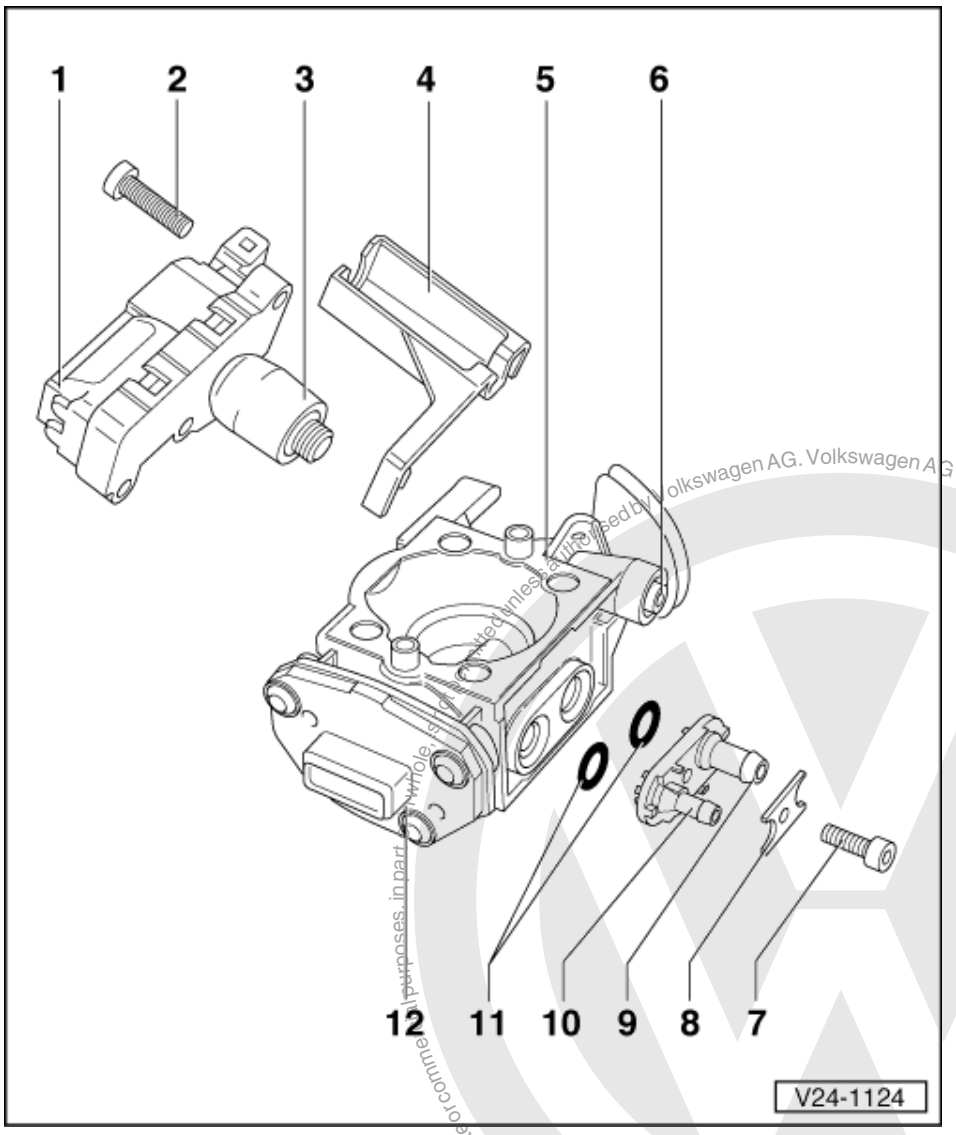

3 Idling switch (F60)*
- Checking and adjusting =>Page 40
- Renewing: Renew throttle valve positioner

4 Support bracket
- For accelerator cable
- Adjusting accelerator cable

=> Repair group 20; Removing and installing parts of the fuel supply system; Adjusting accelerator cable Removing and installing parts of the fuel supply system Adjusting accelerator cable

5 Injection unit lower part

6 Limiting screw
- The screw is sealed at the factory and must not be moved!

7 3 Nm

8 Retainer

Protected by copyright. Copying for private or commercial purposes, in part or whole, is not permitted unless authorised by Volkswagen AG. Volkswagen AG does not guarantee or accept any liability with respect to the correctness of information in this document. Copyright by Volkswagen AG.
satelettronica

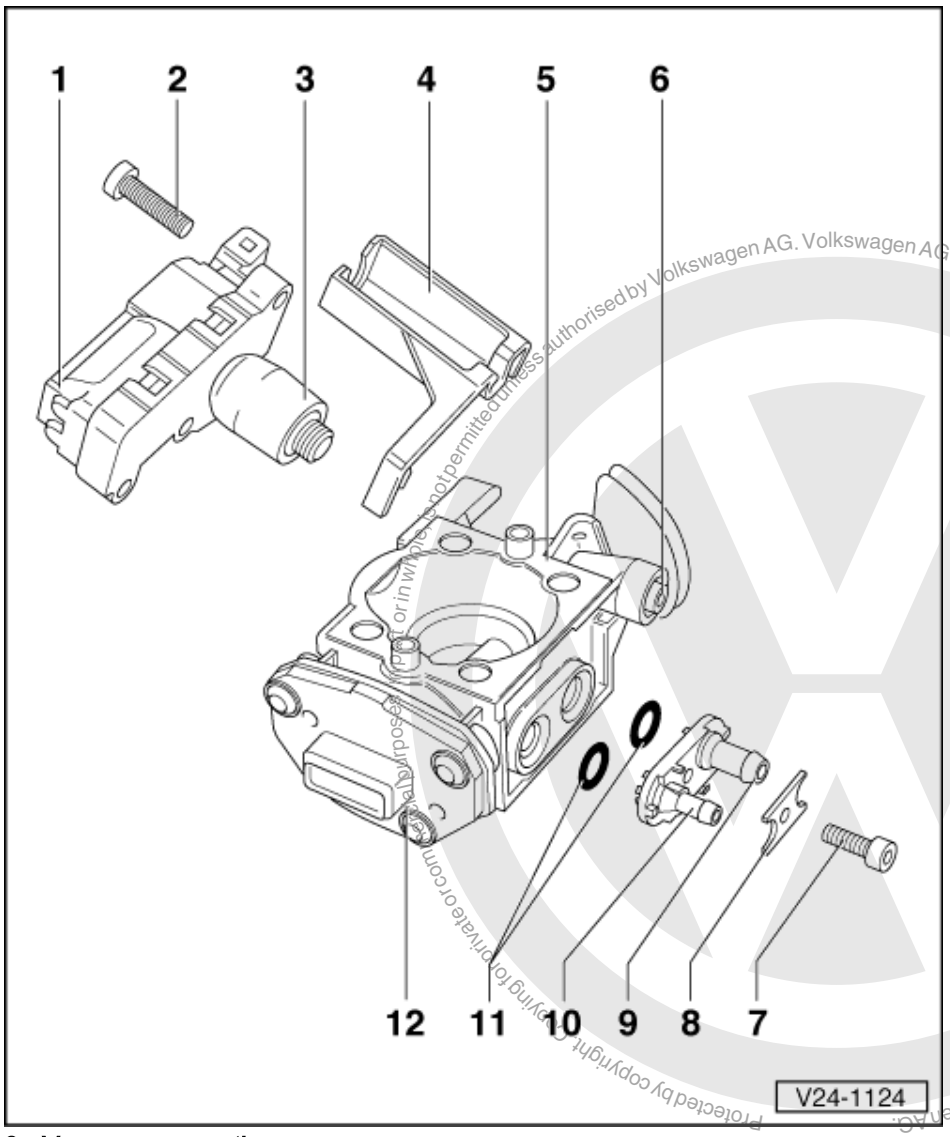

Protected by copyright. Copying for private or commercial purposes, in whole or in part, is not permitted unless authorised by Volkswagen AG. Volkswagen AG does not guarantee or accept any liability with respect to the correctness of information in this document. Copyright by Volkswagen AG.

satelettronica

9 Vacuum connection
- For activated charcoal filter system

=> Repair Group 20; Removing and installing parts of fuel supply system; Removing and installing parts of activated charcoal filter system Removing and installing parts of fuel supply system Removing and installing parts of activated charcoal filter system

10 Vacuum connection
- For intake air preheating

11 O ring
- Renew if damaged

12 Throttle valve potentiometer (G69)*
- Checking =>Page 44
- Must not be adjusted
- If defective: renew injection unit lower part
- Contacts gold plated

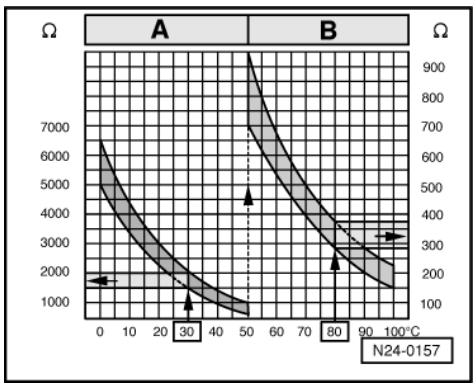

-> Fig. 1 Resistance graph

The diagram is valid for coolant temperature sender (G62) and intake air sender (G42).

Scale A shows resistance values for temperature range 0...50 °C and scale B the values for temperature range 50...100 °C.

Examples:

- 30 °C corresponds to a resistance from 1500...2000 ω
- 80 °C corresponds to a resistance from 275...375 ω

1.7 - Safety precautions

Warning!
Fuel system is under pressure! Before opening the system place a cloth around the connection. Then release pressure by carefully loosening the connection.

To prevent injuries to persons and/or damage to the fuel injection and ignition system, the following must be noted:

- Do not touch or disconnect ignition wiring when the engine is running or being turned at starter speed.
- The ignition must be switched off before connecting or disconnecting injection or ignition system wiring or tester cables.
- If the engine is to be turned at starter speed, without starting, e.g. when checking compressions, pull plug off Hall sender (distributor).

1.8 - Rules for cleanliness

When working on the fuel supply/injection system, pay careful attention to the following "5 rules":

- Thoroughly clean all unions and the adjacent areas before disconnecting.
- Place parts that have been removed on a clean surface and cover. Do not use fluffy cloths!
- Carefully cover opened components or seal, if the repair cannot be carried out immediately.
- Only install clean components:
  Only unpack replacement parts immediately prior to installation.
  Do not use parts that have been stored loose (e.g. in tool boxes etc.).
- When the system is open:
  Do not work with compressed air if this can be avoided.
  Do not move vehicle unless absolutely necessary.

satelettronica

1.9 - Technical data

Engine code Idling speed2) rpm	AEV 750...8501)	ADX 750...8501)	AEA 750...8501)
Mono Motronic control unit			
Mono Motronic version	1.2.3R	1.3	1.3
Part No.	030 906 026AC	030 906 026E	032 906 026H
Governed speed rpm	6300	6300	6300

1) Up-to-date specifications:

=> Exhaust emissions test binder

2) Idling speed is not adjustable, observe test conditions => Page 32

1.10 - Idling speed check

Notes:

- Idling speed not adjustable.
- CO content regulated by Lambda control. Faults in Lambda control are detected in self-diagnosis and stored in fault memory.

Special tools, testers and auxiliary items

- Fault reader V.A.G 1551 or vehicle system tester V.A.G 1552 with cable V.A.G 1551/3

Test conditions

- No faults stored in fault memory
  => Page 3 , interrogating fault memory
- Air conditioner switched off
- Accelerator cable adjustment OK

=> Repair group 20; Removing and installing parts of fuel supply system; Adjusting throttle cable Removing and installing parts of fuel supply system; Adjusting throttle cable

- Engine oil temperature min. 80 °C
- Electrical consumers switched off (radiator fan must not run during the check)
- Ignition timing OK., checking
  => Page 70

Test sequence

- Connect fault reader V.A.G 1551 (V.A.G 1552) and select engine electronics control unit (address word 01); carry out selection at idling.
  => Page 2

-> Indicated on display:

```
Rapid data transfer      HELP
Select function XX
```

- Input 04 for "Initiate basic setting" and confirm with Q.

-> Indicated on display:

```
Basic setting      HELP
Input display group number XX
```

Protected by copyright. Copying for private or commercial purposes, in part or in whole, is not permitted unless authorised by Volkswagen AG. Volkswagen AG does not guarantee or accept any liability with respect to the correctness of information in this document. Copyright by Volkswagen AG.
satelettronica

- Input 01 for "Display group number" and confirm with Q.

-> Indicated on display:
(1...4 = Display zones)

```
System in basic setting     1
     1     2     3     4
```

- Observe display zone 4 -8 digit number block-:
  Display: 11000010

Note:

If a different sequence of figures are displayed in display zone 4, the test conditions have not been fulfilled:

=>Page 13 ; Relevance of figures in 8 digit number block

- Check idling speed in display zone 1.
  Specification: 750...850 rpm1)

  1) Up-to-date specifications:

=> Emissions test binder

If the specification is not attained:

- Check throttle valve positioner => Page 38

1.11 - Checking Lambda probe and Lambda control

Protected by copyright. Copying for private or commercial purposes, in part or in whole is not permitted unless authorised by Volkswagen AG. Volkswagen AG does not guarantee or accept any liability with respect to the correctness of information in this document. Copyright by Volkswagen AG.

Special tools, testers and auxiliary items

- Fault reader V.A.G 1551 or vehicle system tester V.A.G 1552 with cable V.A.G 1551/3
- Test box V.A.G 1598/18
- Hand multimeter V.A.G 1526 or multimeter V.A.G 1715
- Adapter set V.A.G 1594
- Current flow diagram

Check conditions

- Coolant temperature at least 85 °C
- Exhaust system between catalyst and cylinder head free of leaks

Functional check of Lambda probe

- Connect fault reader V.A.G 1551 (V.A.G 1552) and select engine electronics control unit (address word 01); carry out selection at idling.
  => Page 2

-> Indicated on display:

```
Rapid data transfer      HELP
Select function XX
```

- Input 08 for "Read measured value block" function and confirm with Q.

-> Indicated on display:

```
Read measured value block      HELP
Input display group number XX
```

Engine code AEV

satelettronica

- Input 00 for "Display group number" and confirm with Q.

-> Indicated on display:
(1...10 = Display zones)

```
Read measured value block     0
     1     2     3     4     5     6
7     8     9     10
```

- Note reading in display zone 5 (Lambda probe reading). The displayed figure must fluctuate at least 30 times per minute
  in range
  between 106...150.

Engine codes ADX, AEA

- Input 07 for "Display group number" and confirm with Q.

-> Indicated on display:
(1...4 = Display zones)

```
Read measured value block 7
     1     2     3     4
```

- Note Lambda probe voltage in display zone 2. The voltage must fluctuate at least 30 times per minute
  in range of
  0... 1.0 V.

If the displayed figure/probe voltage does not fluctuate as stated:

- Check Lambda probe heating => Page 36 .
- Check Lambda probe for soot. Renew if necessary.

Checking Lambda probe working range

- Press C key.

-> Indicated on display:

```
Read measured value block     HELP
Input display group number XX
```

- Input 05 for "Display group number" and confirm with Q.

-> Indicated on display:
(1...4 = Display zones)

```
Read measured value block 5
     1     2     3     4
```

- Note displayed figure in display zone 3.
  Specification: 0.99...1.01
- Note displayed figure in display zone 4 (altitude correction).

Altitude of workshop	Specification
0 m	-5.5...11.7 %
250 m	-7.8...9.4 %
500 m	-10.5...6.6 %
750 m	-12.9...4.3 %
1000 m	-15.6...1.6 %
1250 m	-17.9...0.4 %
1500 m	-20.7...-3.1 %
1750 m	-23.4...-5.9 %
2000 m	-26.1...-8.6 %

Protected by copyright. Copying for private or commercial purposes, in part or in whole, is not permitted unless authorised by Volkswagen AG. Volkswagen AG does not guarantee or accept any liability with respect to the correctness of information in this document. Copyright by Volkswagen AG.

satelettronica

Altitude of workshop	Specification
2250 m	-28.5...-10.9 %
2500 m	-31.2...-13.7 %
2750 m	-33.9...-16.4 %
3000 m	-36.3...-18.7 %

If specification attained:

- Press ⇒ key.
- Input 06 for "End output" and confirm with Q.

If specification not attained or exceeded:

- Check Lambda probe heating => Page 36 .
- Check intake air system for leaks (unmetered air). To do this, leave fault reader in this setting and allow engine to continue running
  => Page 61
- Check Lambda probe for soot. Renew if necessary.

Checking Lambda probe wiring

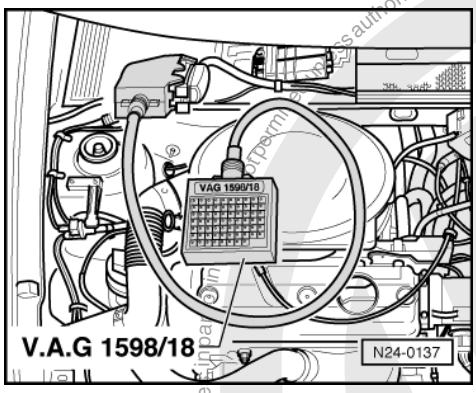

- -> Connect test box V.A.G 1598/18 to control unit wiring loom.

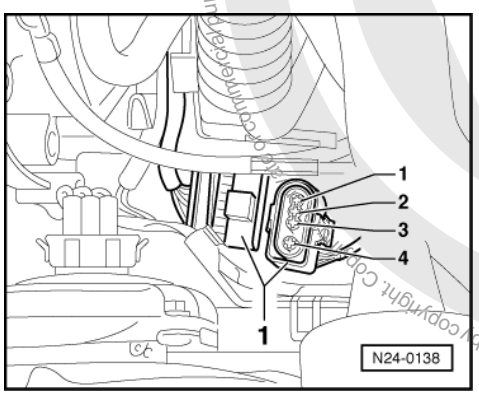

- -> Separate 4 pin connector to Lambda probe -1-.
- Check wiring between test box and 4 pin connector for open circuit according to current flow diagram.
  Contact 3+socket 15
  Contact 4+socket 38
  Wire resistance: Max. 1.5 ω
- Check wiring at 4 pin connector for short to one another.
  Specification: ∞ω

If the specifications are not attained:

- Check wiring according to current flow diagram.

Protected by copyright. Copyright by Volkswagen AG.
Copyright by Volkswagen AG. Volkswagen AG does not guarantee or accept any liability with respect to the correctness of information in this document.
satelettronica

1.12 - Checking Lambda probe heating

Special tools, testers and auxiliary items

- Test box V.A.G 1598/18
- Hand multimeter V.A.G 1526 or multimeter V.A.G 1715
- Adapter set V.A.G 1594
- Current flow diagram

Check conditions

- Fuse 18 OK.
- Fuel pump relay OK

Checking voltage supply

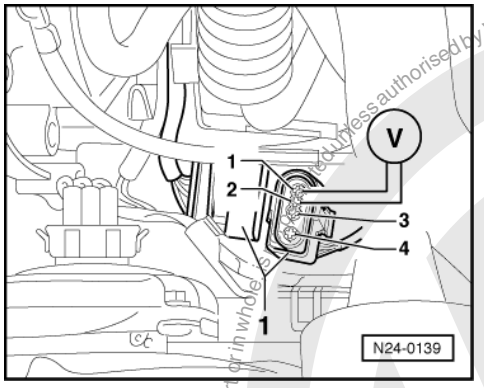

- -> Separate 4 pin connector -1- to Lambda probe.
- Connect multimeter to measure voltage at contacts 1+2 of connector.
- Start engine.
  Specification: Min. 11 V
- Switch off ignition

If no voltage is present:

- Check wiring to relay plate according to current flow diagram.

1.13 - Checking engine operating mode

Note:

Check establishes whether Mono Motronic control unit (J257) recognises the engine operating modes (idling, part throttle, acceleration/full throttle enrichment, full throttle and overrun).

Special tools, testers and auxiliary items

- Fault reader V.A.G 1551 or vehicle system tester V.A.G 1552 with cable V.A.G 1551/3

Test conditions

- Coolant temperature at least 80 °C

Test sequence

- Connect fault reader V.A.G 1551 (V.A.G 1552) and select engine electronics control unit (address word 01); carry out selection at idling.

Copyright by Volkswagen AG. Volkswagen AG does not guarantee or accept any liability with respect to the correctness of information in this document. Copyright by Volkswagen AG. Protected by copyright. Copying for private or commercial purposes, in part or in whole, is not permitted unless authorised by Volkswagen AG.
satelettronica

=> Page 2

-> Indicated on display:

```
Rapid data transfer     HELP
Select function XX
```

- Input 08 for "Read measured value block" function and confirm with Q.

-> Indicated on display:

```
Read measured value block     HELP
Input display group number XX
```

- Enter 04 for "Display group number" and confirm with Q.

-> Indicated on display:
(1...4 = Display zones)

```
Read measured value block     4
     1     2     3     4
```

- Observe display zone 4 -8 digit number block-:

Display in operating mode

- ◆ Idling:

  2nd position from right must display 1
  Display: 00000010

- ◆ Part throttle:

- Rev up evenly.

  3rd position from right must display 1
  Display:: 00000100

- ◆ Acceleration/full throttle enrichment:

- Quickly open throttle valve slightly.

  5th position from right must display 1
  Display: 00010100

- ◆ Full throttle:

- Floor accelerator pedal and release.

  4th position from left must briefly display 1
  Display: 00011000

- ◆ Overrun mode:

- Raise engine speed to above 3000 rpm.
- Close throttle abruptly.

  As long as the engine speed is above 1500 rpm 1st position from left must display 1
  Display: 00000011 (briefly)

Note:

Below 1500 rpm idling speed is again recognised.

- Press ⇒ key.

Protected by copyright. Copying for private or commercial purposes, in part or in whole, is not permitted unless authorised by Volkswagen AG. Volkswagen AG does not guarantee or accept any liability with respect to the correctness of information in this document. Copyright by Volkswagen AG.
satelettronica

- Input 06 for "End output" and confirm with Q.

If the specifications are not attained:

- Interrogate fault memory. Eliminate faults if necessary => Page 3 .
- Check throttle valve potentiometer
  => Page 44 .
- Check idling switch => Page 40 .

1.14 - Checking throttle valve positioner

Checking function

Functional check => Page 7 , Final control diagnosis

Checking activation

Special tools, testers and auxiliary items

- Hand multimeter V.A.G 1526 or multimeter V.A.G 1715
- Diode test lamp V.A.G 1527
- Test box V.A.G 1598/18
- Adapter set V.A.G 1594
- Current flow diagram

Test conditions

- Fault reader V.A.G 1551 (V.A.G 1552) connected
- Ignition switched off

Test sequence

- Remove air cleaner.

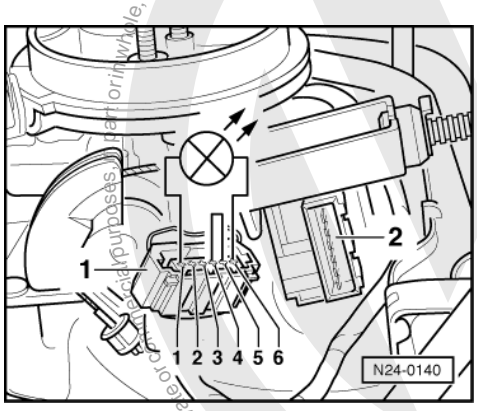

- -> Pull plug -1- off throttle valve positioner (V60) -2- .
- Connect diode test lamp V.A.G 1527 with aux. cables from V.A.G 1594 to contacts 1+6 of the connector.
- Bridge contacts 4+5 with aux. cables from V.A.G 1594.
- Switch on ignition and again perform self-diagnosis until the throttle valve positioner is activated.
  LED must light up.
- Slowly open throttle valve slightly. The display must
  briefly change to the other LED
  and then
  go out.

Note:

If the check has to be repeated separate aux. cables on contacts 4+5 and then reconnect.

Protected by copyright. Copying for private or commercial purposes, in part or in whole, is not permitted unless authorised by Volkswagen AG. Volkswagen AG does not guarantee or accept any liability with respect to the correctness of information in this document. Copyright by Volkswagen AG.
satelettronica

- Carry out final control diagnosis up to end.
- Switch off ignition and connect plug.
- Interrogate fault memory=> Page 3 .

If the LEDs do not light up:

- Switch off ignition

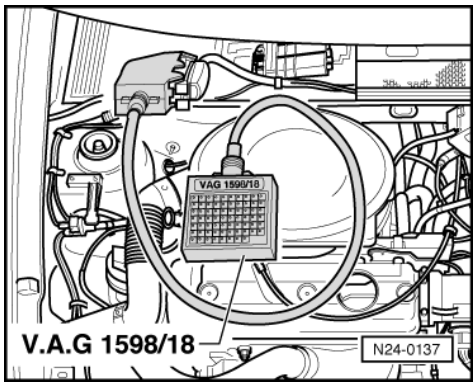

- -> Connect test box V.A.G 1598/18 to control unit wiring loom.
- Check wiring between test box and 6 pin connector for open circuit according to current flow diagram.
  Contact 1+socket 26
  Contact 2+socket 16
  Contact 3+socket 23
  Contact 4+socket 20
  Contact 5+socket 10
  Contact 6+socket 2
  Wire resistance: Max. 1.5 ω
- Check wiring at 6 pin connector for short to one another.
  Specification: ∞ω

Checking resistance

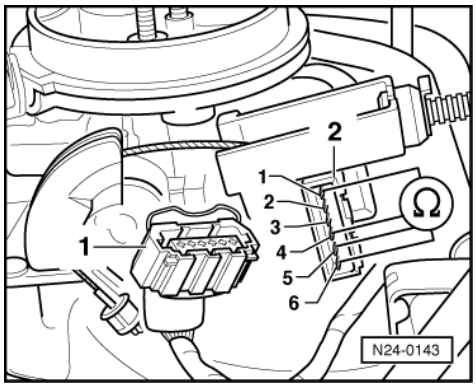

Test conditions

- Ignition switched off.

Test sequence

- Remove air cleaner.
- -> Pull connector -1- off throttle valve positioner -2-.
- Check resistance with hand multimeter V.A.G 1526 and aux. cables from V.A.G 1594 at contacts of throttle valve positioner as follows:
  Specifications:
  between contacts 1+6 = 3...200 ω
  between contacts 4+5
  Throttle valve closed = max. 200 ω

Protected by copyright. Copying for private or commercial purposes, in part or in whole, is not permitted unless authorised by Volkswagen AG. Volkswagen AG does not guarantee or accept any liability with respect to the correctness of information in this document. Copyright by Volkswagen AG.
satelectronica

Throttle valve open =∞ ω

If the specifications between contacts 4+5 are not attained:

- Check idling switch => Page 40 .

1.15 - Checking and adjusting idling switch

Special tools, testers and auxiliary items

- Fault reader V.A.G 1551 or vehicle system tester V.A.G 1552 with cable V.A.G 1551/3
- Hand multimeter V.A.G 1526 or multimeter V.A.G 1715
- Test box V.A.G 1598/18
- Adapter set V.A.G 1594
- Current flow diagram

Notes:

- The adjustment is only necessary if the throttle valve positioner or the injection unit lower part is replaced.
- The idling switch (F60) can only be adjusted if the throttle valve positioner is fully out.

- Connect fault reader V.A.G 1551 (V.A.G 1552) and select engine electronics control unit (address word 01); carry out selection with ignition switched on.
  => Page 2

-> Indicated on display:

```
Rapid data transfer      HELP
Select function XX
```

- Input 04 for "Initiate basic setting" and confirm with Q.

-> Indicated on display:

```
Basic setting      HELP
Input display group number XX
```

- Input 01 for "Display group number" and confirm with Q.

-> Indicated on display:
(1...4 = Display zones)

```
System in basic setting      1
     1     2     3     4
```

Checking function

- Observe 2nd position from left in display zone 4 -8 digit number block-.
  Specification: 01000010
- Open throttle valve slightly. The display at 2nd position from left must jump to 0
  Display: 00000010

If the specifications are not attained:

- Remove air cleaner.

Display	Cause	Continuation of check
Always 1	Short to earth	=> Page 41
Always 0	Open circuit or short to positive	=> Page 41

Protected by copyright. Copying for private or commercial purposes, in part or in whole, is not permitted unless authorised by Volkswagen AG. Volkswagen AG does not guarantee or accept any liability with respect to the correctness of information in this document. Copyright by Volkswagen AG.
satelettronica

Continuation of check when display = always 1:

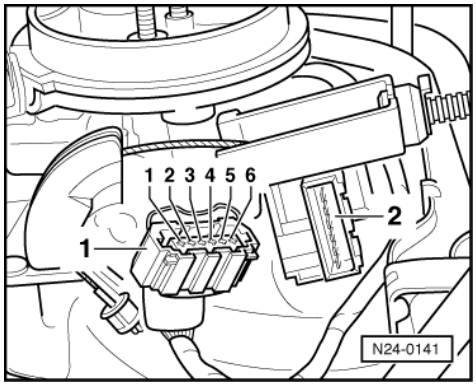

- -> Pull plug -1- off throttle valve positioner (V60) -2- .

Display 0:

- Replace throttle valve positioner (V60).

Display 1:

- Press ⇒ key.
- Input 06 for "End output" and confirm with Q.
- Switch off ignition
- Pull connector off Mono Motronic control unit.
- Check wiring to control unit at 6 pin connector contact 5 for short to wire contact 4 and to vehicle earth.

If no fault in wire is detected:

- Renew Mono Motronic control unit (J257)
  =>Page 19 , item 10 .

Continuation of check when display = always 0:

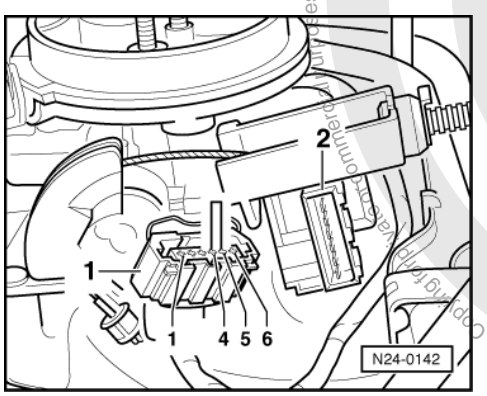

- -> Pull plug -1- off throttle valve positioner (V60) -2-
- Bridge connector contacts 4+5 with aux. cables from V.A.G 1594 and observe display.

Display 1:

- Replace throttle valve positioner (V60).

Display 0:

- Press ⇒ key.
- Input 06 for "End output" and confirm with Q.

Protected by copyright. Copyright by Volkswagen AG. Volkswagen AG does not guarantee or accept any liability with respect to the correctness of information in this document. Copyright by Volkswagen AG. Reproduction, commercial use, sale, or transmission to third parties, in part or in whole, is not permitted unless authorised by Volkswagen AG.
satelettronica

- Switch off ignition

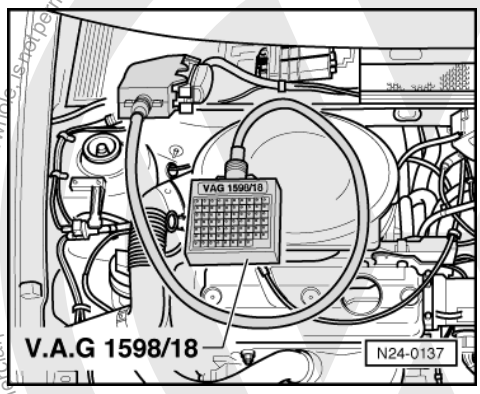

-> Connect test box V.A.G 1598/18 to control unit wiring loom.
- Check wiring between test box and 6 pin connector for open circuit according to current flow diagram.
  Contact 4+socket 20
  Contact 5+socket 10
  Wire resistance: Max. 1.5 ω

If no wiring fault is detected:
- Renew Mono Motronic control unit (J257)
  =>Page 19 , item 10 .

Checking adjustment

Note:

The adjustment of the idling switch must be performed in function "04 Basic setting" -positioner fully extended-. If the basic setting has to be exited for checking the wiring, the system must be brought back to basic setting with ignition switched on.

-> Indicated on display:
(1...4 = Display zones)

```
System in basic setting      1
     1      2      3      4
```

- Select display group 00, to do this
  - On V.A.G 1551 press key 1
  - On V.A.G 1552 press key ↓

-> Indicated on display:
(1...10 = Display zones)

```
System in basic setting 0
     1      2      3      4      5      6
7     8      9      10
```

- Observe displayed figure in display zone 2 (throttle valve potentiometer path 1):
  Specification: 196...200

If the specification is not obtained:
- Remove air cleaner.

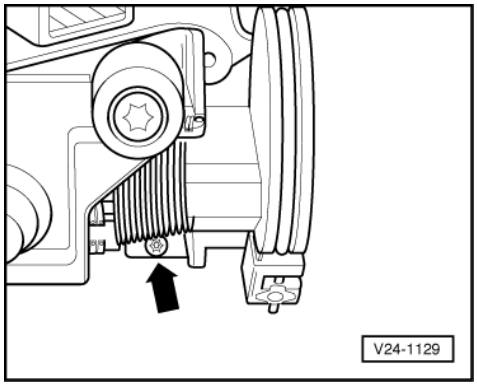

Protected by copyright. Copying for private or commercial purposes, in part or in whole, is not permitted unless authorised by Volkswagen AG. Volkswagen AG does not guarantee or accept any liability with respect to the correctness of information in this document. Copyright by Volkswagen AG.
satelettronica

- -> Correct adjustment on the stop screw-arrow-.
  Setting value: 198±1

Note:
If during adjustment the throttle valve is opened to gain access to the screw, the control unit will move the throttle valve positioner back. To move the positioner fully out again, the function basic setting must be selected again.

- Press ⇒ button. The throttle valve positioner must move in to its start point.
- Input 06 for "End output" and confirm with Q.

If it is not possible to adjust to specification:
- Renew injection unit lower part.

1.16 - Checking sender for throttle valve positioner

Special tools, testers and auxiliary items
- Hand multimeter V.A.G 1526 or multimeter V.A.G 1715
- Diode test lamp V.A.G 1527
- Test box V.A.G 1598/18
- Adapter set V.A.G 1594
- Current flow diagram

Test conditions
- Fuse 15 OK.

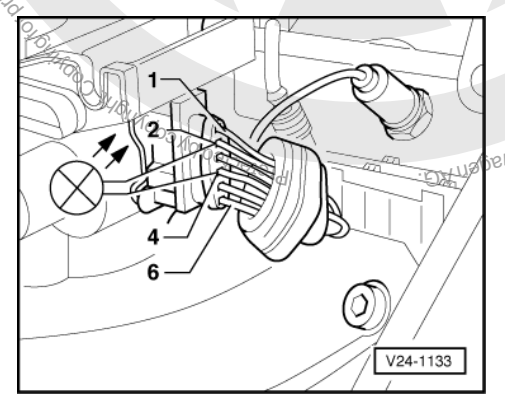

Test sequence
- Remove air cleaner.
- -> Pull back rubber boot on throttle valve positioner (V60) plug.
- Connect diode test lamp V.A.G 1527 with aux. cables from V.A.G 1594 to contacts 2+4.

- Initiate final control diagnosis => Page 7 .
  When activating the throttle valve positioner the LED must flicker.

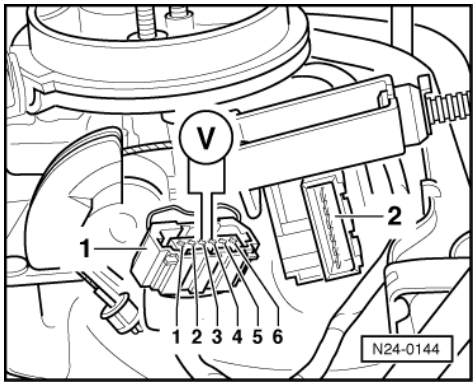

Copyright by Volkswagen AG. Volkswagen AG does not guarantee or accept any liability with respect to the correctness of information in this document. Copyright by Volkswagen AG. Reproduction for private or commercial purposes, in part or in whole, is not permitted unless authorised by Volkswagen AG.
satelettronica

If the LED does not flicker:

- Input 06 for "End output" and confirm with Q.
- -> Pull connector -1- off throttle valve positioner -2-.
- Connect multimeter with aux. cables from V.A.G 1594 to measure voltage at contacts 3+4 of connector.
  Specification: At least 11 V
- Switch off ignition

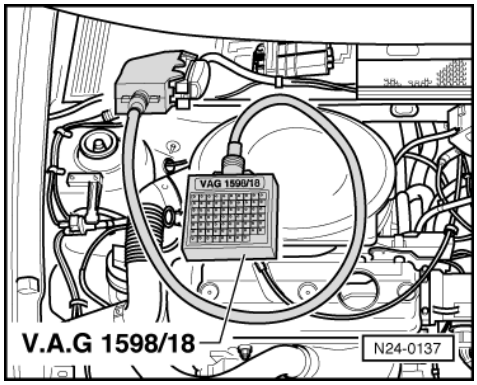

- -> Connect test box V.A.G 1598/18 to control unit wiring loom.
- Check wiring between test box and 6 pin connector for open circuit according to current flow diagram.
  Contact 2+socket 16
  Contact 3+socket 23
  Contact 4+socket 20
  Wire resistance: Max. 1.5 ω
- Additionally check wires for short to one another.
  Specification: ∞ω

If no wiring fault is detected and voltage was present between contacts 3+4:

- Replace throttle valve positioner (V60).

If no wiring fault is detected and no voltage was present between contacts 3+4:

- Check wiring from contact 3 to relay plate and from contact 4 to engine earth according to current flow diagram.

1.17 - Checking throttle valve potentiometer

Special tools, testers and auxiliary items

- Fault reader V.A.G 1551 or vehicle system tester V.A.G 1552 with cable V.A.G 1551/3
- Test box V.A.G 1598/18
- Hand multimeter V.A.G 1526 or multimeter V.A.G 1715
- Adapter set V.A.G 1594
- Current flow diagram

Test sequence

- Remove air cleaner.
- Connect fault reader V.A.G 1551 (V.A.G 1552) and select engine electronics control unit (address word 01); carry out selection with ignition switched on.
  => Page 2

-> Indicated on display:

```
Rapid data transfer      HELP
Select function XX
```

- Input 08 for "Read measured value block" function and confirm with Q.

Protected by copyright. Copying for private or commercial purposes, in part or in whole, is not permitted unless authorised by Volkswagen AG. Volkswagen AG does not guarantee or accept any liability with respect to the correctness of information in this document. Copyright by Volkswagen AG.
satelettronica

-> Indicated on display:

```
Read measured value block     HELP
Input display group number XX
```

- Input 00 for "Display group number" and confirm with Q.

-> Indicated on display:
(1...10 = Display zones)

```
Read measured value block     0
     1     2     3     4     5     6
7     8     9     10
```

- Slowly open throttle valve fully and observe the numerical figures in display zones 2 and 3.

  Display zone 2:
  The numerical figure must increase uniformly until throttle valve is 1/4 open and then remain constant
  Display zone 3:
  The numerical figure must increase uniformly over the entire range

- Press ⇒ key.
- Input 06 for "End output" and confirm with Q.

If one or both figures remain constant:
- Switch off ignition

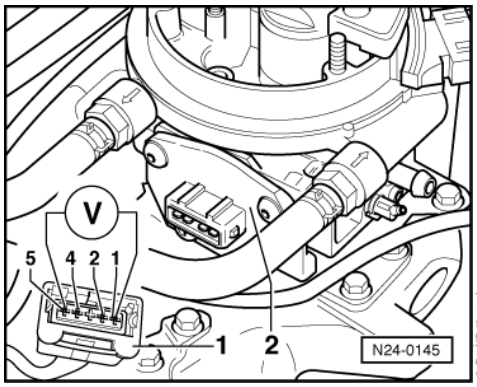

- -> Pull 5 pin connector -1- off throttle valve potentiometer -2-.
- Connect multimeter with aux. cables from V.A.G 1594 to measure voltage at contacts 1+5 of the connector.
- Switch on ignition and measure voltage
  Specification: approx. 5 V

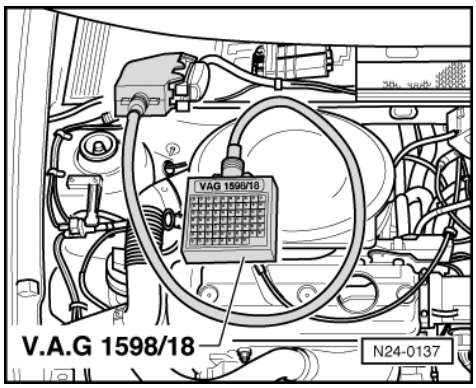

- -> Connect test box V.A.G 1598/18 to control unit wiring loom.
- Check wiring between test box and 5 pin connector for open circuit according to current flow diagram.
  Contact 1+socket 17
  Contact 2+socket 41
  Contact 4+socket 18
  Contact 5+socket 14

Protected by copyright. Copying for private or commercial purposes, in part or in whole, is not permitted unless authorised by Volkswagen AG. Volkswagen AG does not guarantee or accept any liability with respect to the correctness of information in this document. Copyright by Volkswagen AG.
satelettronica

Wire resistance: Max. 1.5 ω
- Additionally check wires for short to one another.
  Specification: ∞ω

If no wiring fault is detected and voltage was present between contacts 1+5:

- Replace lower part of injection unit.

If no wiring fault is detected and no voltage was present between contacts 1+5:

- Renew Mono Motronic control unit (J257)
  =>Page 19 , item 10 .

1.18 - Checking coolant temperature sender

Special tools, testers and auxiliary items

- Fault reader V.A.G 1551 or vehicle system tester V.A.G 1552 with cable V.A.G 1551/3
- Test box V.A.G 1598/18
- Hand multimeter V.A.G 1526 or multimeter V.A.G 1715
- Adapter set V.A.G 1594
- Current flow diagram

Test sequence

- Connect fault reader V.A.G 1551 (V.A.G 1552) and select engine electronics control unit (address word 01); carry out selection at idling.
  => Page 2

-> Indicated on display:

```
Rapid data transfer      HELP
Select function XX
```

- Input 08 for "Read measured value block" function and confirm with Q.

-> Indicated on display:

```
Read measured value block      HELP
Input display group number XX
```

- Input 01 for "Display group number" and confirm with Q.

-> Indicated on display:
(1...4 = Display zones)

```
Read measured value block      1
     1     2     3     4
```

- Note intake air temperature figure in display zone 2.

Display	Cause	Continuation of check
approx. -50 °C	Open circuit or short to positive	=> Page 47
Approx. 130 °C	Short to earth	=> Page 48
Approx. coolant temperature1)	---	Only if sporadic faults have been detected:2) => Page 48

Protected by copyright. Copying for private or commercial purposes, in part or in whole, is not permitted unless authorised by Volkswagen AG. Volkswagen AG does not guarantee or accept any liability with respect to the correctness of information in this document. Copyright by Volkswagen AG.
satelettronica

1) If a temperature is displayed which deviates greatly from the ambient temperature of the sender, check sender wiring for transfer resistances.
2) Check is only possible when the engine is cold.

Continuation of check when display = -50 °C:

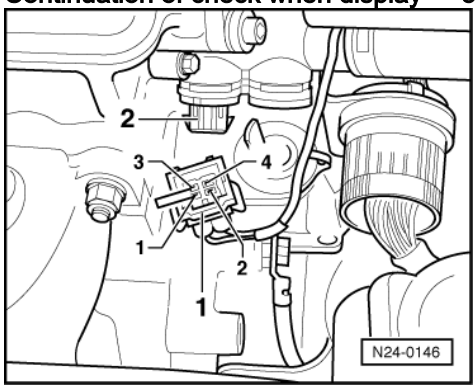

- -> Pull 4 pin connector -1- of coolant temperature sender (G62) -2-.
- Bridge connector contacts 1+3 with aux. cables from V.A.G 1594 and observe display.

Display 130 ° C:
- Replace coolant temperature sender -2-.

Display -50 ° C:
- Press ⇒ button.
- Input 06 for "End output" and confirm with Q.
- Switch off ignition

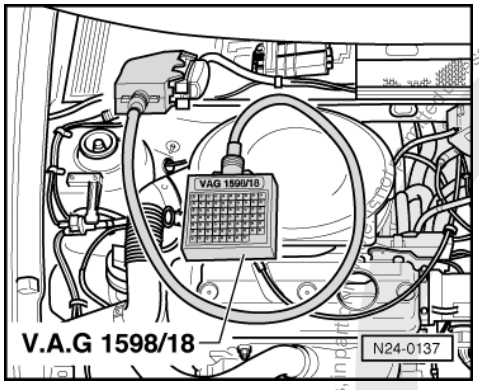

- -> Connect test box V.A.G 1598/18 to control unit wiring loom.
- Check wire between test box socket 42+4 pin connector contact 3 for open circuit according to current flow diagram.
  Wire resistance: Max. 1.5 ω
- Additionally check wire for short to battery positive.
  Specification: ∞ω

If no fault in wire is detected:

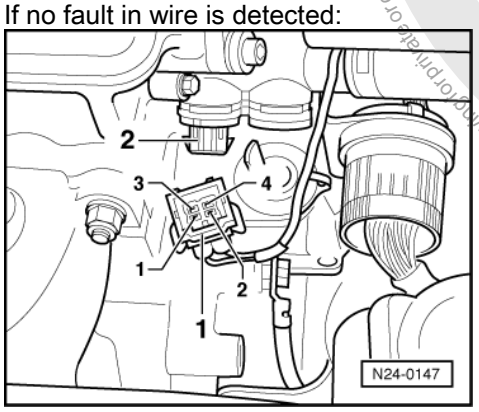

satelettronica
Protected by copyright. Copyright by Volkswagen AG. Volkswagen AG does not guarantee or accept any liability with respect to the correctness of information in this document. Copyright by Volkswagen AG.

- Renew Mono Motronic control unit (J257)
  =>Page 19 , item 10 .

Continuation of check when display = 130 °C:

- -> Pull 4 pin connector -1- of coolant temperature sender (G62) -2-.

Display -50 ° C:

- Replace coolant temperature sender -2-.

Display 130 ° C:

- Press ⇒ button.
- Input 06 for "End output" and confirm with Q.
- Switch off ignition
- Pull connector off Mono Motronic control unit.
- Check wire between control unit connector and 4 pin connector contact 3 for short to wire contact 1 and to vehicle earth, according to current flow diagram.
  Specification: ∞ω

If no fault in wire is detected:

- Renew Mono Motronic control unit (J257)
  =>Page 19 , item 10 .

Continuation of check when display = coolant temperature:

Functional check of sender

- Observe coolant temperature figure in display zone 2. The temperature figure must
  Increase uniformly and without interruption.

Notes:

- If the display on fault reader jumps by 2...5 °C, it is a control unit fault and not caused by a defective sender.
- If irregular engine running occurs in certain temperature ranges and the temperature figure does not increase without interruption, the temperature signal is temporarily interrupted and the sender must be renewed.

- Press ⇒ key.
- In put 06 for "End output" and confirm with Q.

1.19 - Checking intake air temperature sender

Special tools, testers and auxiliary items

- Fault reader V.A.G 1551 or vehicle system tester V.A.G 1552 with cable V.A.G 1551/3
- Test box V.A.G 1598/18
- Hand multimeter V.A.G 1526 or multimeter V.A.G 1715
- Adapter set V.A.G 1594
- Current flow diagram
- Chilling spray (commercially available)

Test sequence

- Connect fault reader V.A.G 1551 (V.A.G 1552) and select engine electronics control unit (address word 01); carry out selection with ignition switched on.
  => Page 2

-> Indicated on display:

Protected by copyright. Copying for private or commercial purposes, in part or in whole, is not permitted unless authorised by Volkswagen AG. Volkswagen AG does not guarantee or accept any liability with respect to the correctness of information in this document. Copyright by Volkswagen AG.
satelettronica

```
Rapid data transfer      HELP
Select function XX
```

- Input 08 for "Read measured value block" function and confirm with Q.

-> Indicated on display:

```
Read measured value block      HELP
Input display group number XX
```

- Input 02 for "Display group number" and confirm with Q.

-> Indicated on display:
(1...4 = Display zones)

```
Read measured value block 2
    1      2      3      4
```

- Note intake air temperature figure in display zone 4.

Display	Cause	Continuation of check
Approx. -55 °C	Open circuit or short to positive	=> Page 49
Approx. 130 °C or higher	Short to earth	=> Page 50
Approx. ambient temperature1)	---	=> Page 51

1) If a temperature is displayed which deviates greatly from the ambient temperature of the sender, check sender wiring for transfer resistances.

Continuation of check when display = -55 °C:

- Remove air cleaner.

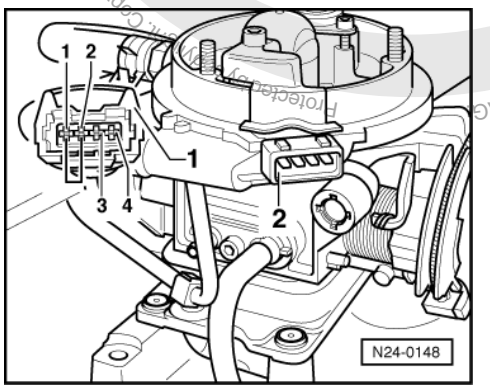

- -> Pull 4 pin connector -1- off injection unit -2-.
- Bridge connector contacts 1+2 with aux. cables from V.A.G 1594 and observe display.

Display approx. 130 °C or higher:

- Replace injector bracket with intake air temperature sender (G42) =>Page 27 , item 7 .

Display approx. -55 °C:

- Press ⇒ button.
- Input 06 for "End output" and confirm with Q.
- Switch off ignition

Protected by copyright. Copying for private or commercial purposes, in part or in whole, is not permitted unless authorised by Volkswagen AG. Volkswagen AG does not guarantee or accept any liability with respect to the correctness of information in this document. Copyright by Volkswagen AG
satelettronica

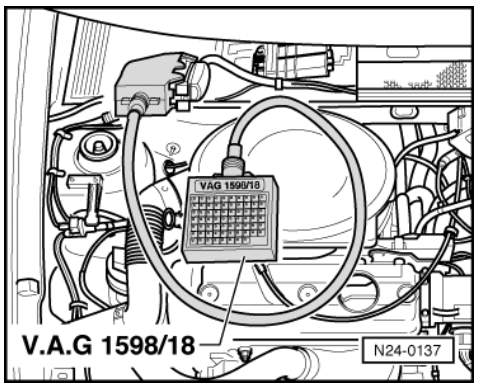

- -> Connect test box V.A.G 1598/18 to control unit wiring loom.
- Check wire between test box socket 43+4 pin connector contact 2 for open circuit according to current flow diagram.
  Wire resistance: Max. 1.5 ω
- Additionally check wire for short to battery positive.
  Specification: ∞ω

If no fault in wire is detected:

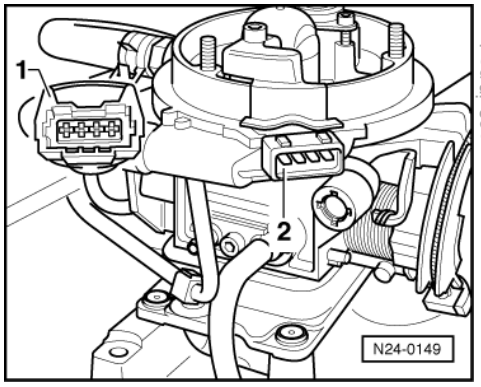

- Renew Mono Motronic control unit (J257)
  =>Page 19 , item 10 .

Continuation of check when display = 130 °C or higher:

- Remove air cleaner.
- -> Pull 4 pin connector -1- off injection unit -2-.

Display approx. -55 °C:

- Replace injector bracket with intake air temperature sender (G42) =>Page 27 , item 7 .

Display approx. 130 °C or higher:

- Press ⇒ button.
- Input 06 for "End output" and confirm with Q.
- Switch off ignition
- Pull connector off Mono Motronic control unit.
- Check wiring to control unit connector at 4 pin connector contact 2 for short to wire contact 1 and to vehicle earth.
  Specification: ∞ω

If no wiring fault is detected:

- Renew Mono Motronic control unit (J257)
  =>Page 19 , item 10 .

Protected by copyright. Copying for private or commercial purposes, in part or in whole, is not permitted unless authorised by Volkswagen AG. Volkswagen AG does not guarantee or accept any liability with respect to the correctness of information in this document. Copyright by Volkswagen AG.
satelettronica

Continuation of check when display = ambient temperature:

- Remove air cleaner cover.
- Note intake air temperature figure in display zone 4.

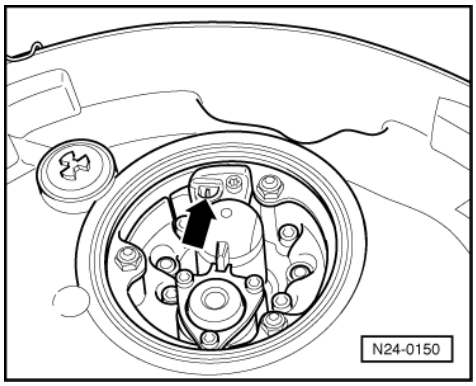

- -> Spray sender arrow with a commercial chilling spray and at the same time observe the temperature figure. The temperature figure must
  decrease.
- Press ⇒ button.
- Input 06 for "End output" and confirm with Q.

1.20 - Checking injector

Test conditions

- Fuse 18 OK.

Checking function

Engine codes ADX, AEA:

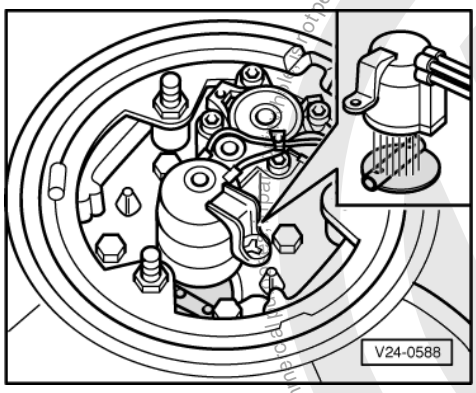

Functional check can be performed via final control diagnosis => Page 7 .

- Remove air cleaner cover.
- -> Start engine and run at idling speed, or if engine will not start, operate starter. The spray formation must be visible on the
  throttle valve.
- Switch off ignition and check injector (N181) for leaks.
  Leakage must not exceed 2 drops per minute.

If no spray can be seen:

- Check fuel pressure regulator => Page 59 .

Protected by copyright. Copying for private or commercial purposes, in part or in whole, is not permitted unless authorised by Volkswagen AG. Volkswagen AG does not guarantee or accept any liability with respect to the correctness of information in this document. Copyright by Volkswagen AG.
satelettronica

- Check activation.

Checking activation

Special tools, testers and auxiliary items

- Test box V.A.G 1598/18
- Diode test lamp V.A.G 1527
- Adapter set V.A.G 1594
- Current flow diagram

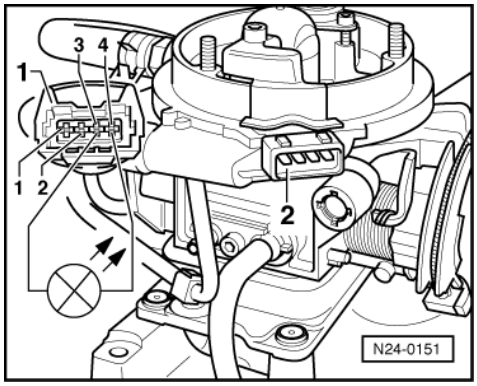

Test sequence

- Remove air cleaner.
- -> Pull 4 pin connector -1- off injection unit -2-.
- Connect diode test lamp V.A.G 1527 with aux. cables from V.A.G 1594 to contacts 3+4 on connector -1-.
- Operate starter and check injector voltage supply.
  LED must flicker

LED flickers:

- Switch off ignition
- Renew injector.

If the LED does not flicker:

- Switch off ignition

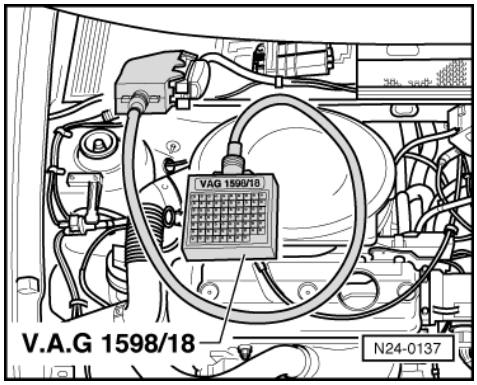

- -> Connect test box V.A.G 1598/18 to control unit wiring loom.
- Check wire between 4 pin connector contact 3 and test box socket 7 for open circuit according to current flow diagram (from the central connector to control unit = resistance wire).
  Wire resistance: Max. 3.5 ω
- Check wire between 4 pin connector contact 4 and relay plate for open circuit according to current flow diagram (from the central connector to relay plate = resistance wire).
  Wire resistance: Max. 2.5 ω
- Additionally check wires for short to one another.

Protected by copyright. Copying for private or commercial purposes, in part or in whole, is not permitted unless authorised by Volkswagen AG. Volkswagen AG does not guarantee or accept any liability with respect to the correctness of information in this document. Copyright by Volkswagen AG.
satelettronica

Specification: ∞ω

If no wiring fault is detected:

- Renew Mono Motronic control unit (J257)
  =>Page 19 , item 10 .

Checking injector resistance

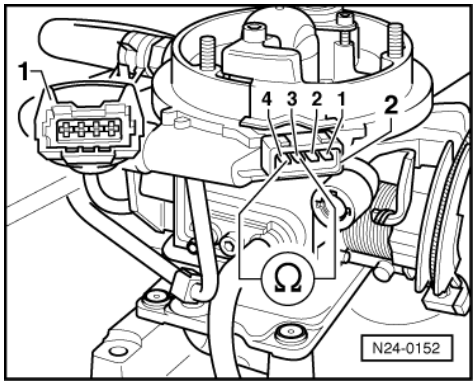

- -> Pull plug -1- off connector -2-.
- Check injector resistance with multimeter and aux. cables from V.A.G 1594 on contacts 3+4 of connector -2-:
  Specification: 1.2...1.6 ω
  (at an ambient temperature of +15...30 °C)

1.21 - Checking speed signal

Special tools, testers and auxiliary items

- Fault reader V.A.G 1551 or vehicle system tester V.A.G 1552 with cable V.A.G 1551/3
- Hand multimeter V.A.G 1526 or multimeter V.A.G 1715
- Test box V.A.G 1598/18
- Adapter set V.A.G 1594
- Current flow diagram

Test conditions

- Speedometer OK., checking:

=> Repair group 90; Electrical system Electrical system

Test sequence

Note:

To check the speed signal the vehicle must be driven. To do this a second person is necessary.

- Connect fault reader V.A.G 1551 (V.A.G 1552) and select engine electronics control unit (address word 01); carry out selection at idling.
  => Page 2

-> Indicated on display:

```
Rapid data transfer      HELP
Select function XX
```

- Input 08 for "Read measured value block" function and confirm with Q.

-> Indicated on display:

Protected by copyright. Copyright by Volkswagen AG. Volkswagen AG does not guarantee or accept any liability with respect to the correctness of information in this document. Copyright by Volkswagen AG. Not permitted unless authorised by Volkswagen AG. Volkswagen AG does not guarantee or accept any liability with respect to the correctness of information in this document. Copyright by Volkswagen AG.
satelettronica

```
Read measured value block     HELP
Input display group number XX
```

- Input 04 for "Display group number" and confirm with Q.

-> Indicated on display:
(1...4 = Display zones)

```
Read measured value block 4
     1     2     3     4
```

- Carry out test drive and when doing this observe display (2nd person necessary).
- Observe displayed figure in display zone 3:
  Specification:
  0...4 km/h = 0
  4...7 km/h = >4
  above 7 km/h = >7
- Press ⇒ key.
- Input 06 for "End output" and confirm with Q.

If no speed is indicated:

- Switch off ignition

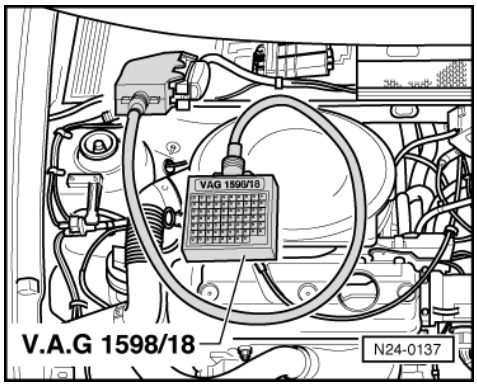

- -> Connect test box V.A.G 1598/18 to control unit wiring loom.
- Connect multimeter to sockets 20+36 to measure voltage.
- Switch on ignition.
- Raise left front wheel or push vehicle. The voltage figure must fluctuate between
  0...at least 4 V.

1.22 - Checking control unit voltage supply

Special tools, testers and auxiliary items

- Fault reader V.A.G 1551 or vehicle system tester V.A.G 1552 with cable V.A.G 1551/3
- Test box V.A.G 1598/18
- Hand multimeter V.A.G 1526 or multimeter V.A.G 1715
- Adapter set V.A.G 1594
- Current flow diagram

Check conditions

- Battery voltage at least 11 V
- Alternator OK

Test sequence

- Connect fault reader V.A.G 1551 (V.A.G 1552) and select engine electronics control unit (address word 01); carry out selection at idling.

Protected by copyright. Copying for private or commercial purposes, in part or in whole, is not permitted unless authorised by Volkswagen AG. Volkswagen AG does not guarantee or accept any liability with respect to the correctness of information in this document. Copyright by Volkswagen AG.
satelettronica

=> Page 2

-> Indicated on display:

```
Rapid data transfer      HELP
Select function XX
```

- Input 08 for "Read measured value block" function and confirm with Q.

-> Indicated on display:

```
Read measured value block      HELP
Input display group number XX
```

- Input 02 for display group 02 and confirm with Q.

-> Indicated on display:
(1...4 = Display zones)

```
Read measured value block 2
     1     2     3     4
```

- Read off figure displayed in display zone 3.
  Specification: approx. battery voltage constant
- Press ⇒ key.
- Input 06 for "End output" and confirm with Q.
- Switch off ignition

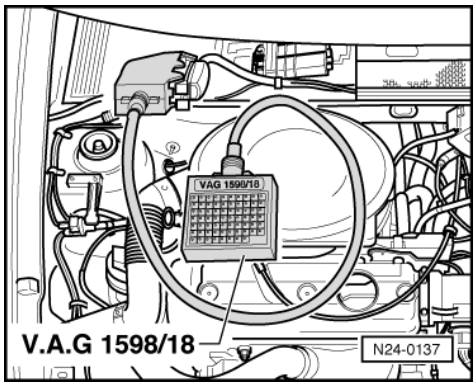

- -> Connect test box V.A.G 1598/18 to control unit wiring loom.
- Measure fault memory voltage supply with multimeter and aux. cables from V.A.G 1594 between test box sockets 1+21:
  Specification: Min. 11 V

If the measurement with V.A.G 1551/1552 does not indicate battery voltage:

- Switch on ignition.
- Measure control unit voltage supply with multimeter and aux. cables from V.A.G 1594 between test box sockets 1+23:
  Specification: Min. 11 V

If the specification is not obtained:

- Check wiring according to current flow diagram.

1.23 - Checking air conditioner and air conditioner compressor signals

These signals from the air conditioner cause the initial control value for the idling stabilization to be increased when the air conditioner compressor switches in. Thereby the idling stabilization remains in the middle of the regulating range.

Protected by copyright. Copying for private or commercial purposes, in part or in whole, is not permitted unless authorised by Volkswagen AG. Volkswagen AG does not guarantee or accept any liability with respect to the correctness of information in this document. Copyright by Volkswagen AG.
satelettronica

Special tools, testers and auxiliary items

- Fault reader V.A.G 1551 or vehicle system tester V.A.G 1552 with cable V.A.G 1551/3
- Test box V.A.G 1598/18
- Hand multimeter V.A.G 1526 or multimeter V.A.G 1715
- Adapter set V.A.G 1594
- Current flow diagram

Test conditions

- Function of air conditioner OK.
- Air conditioner switched off
- No faults stored in fault memory
  => Page 3 , interrogating fault memory
- Interior of vehicle has room temperature (above 15 ° C)

Test sequence

- Connect fault reader V.A.G 1551 (V.A.G 1552) and select engine electronics control unit (address word 01); carry out selection at idling.
  => Page 2

-> Indicated on display:

```
Rapid data transfer      HELP
Select function XX
```

- Input 08 for "Read measured value block" function and confirm with Q.

-> Indicated on display:

```
Read measured value block      HELP
Input display group number XX
```

- Input 01 for "Display group number" and confirm with Q.

-> Indicated on display:
(1...4 = Display zones)

```
Read measured value block      1
     1     2     3     4
```

- Observe display zone 4 -8 digit number block-:

  4th and 5th position from right must display 0
  Display: 11000010

- Switch on air conditioner (lowest temperature and highest blower speed).

  4th and 5th position from right must now display 1
  Display: 11011010
  4th position from right = air conditioner switched on
  5th position from right = air conditioner compressor switched on

If the display does not indicate as described:

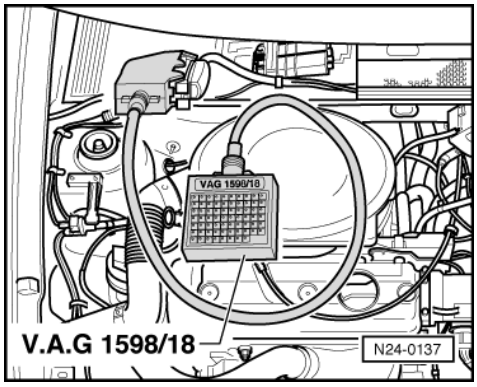

Protected by copyright. Copying for private or commercial purposes, in part or in whole, is not permitted unless authorised by Volkswagen AG. Volkswagen AG does not guarantee or accept any liability with respect to the correctness of information in this document. Copyright by Volkswagen AG.
satelettronica

- -> Connect test box V.A.G 1598/18 to control unit wiring loom.
- Check wiring between test box sockets 33 and 35 and the air conditioner for open circuit according to current flow diagram.
  Wire resistance: Max. 1.5 ω

1.24 - Matching engine electronic control unit to electronic immobilizer

Special tools, testers and auxiliary items

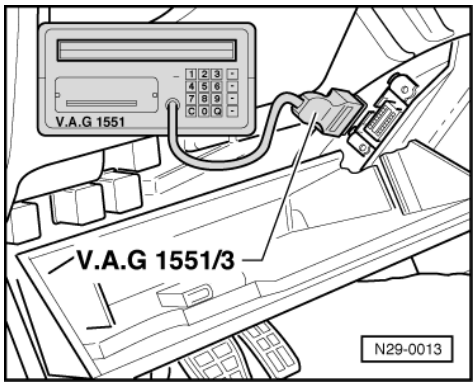

- Fault reader V.A.G 1551 or vehicle system tester V.A.G 1552 with cable V.A.G 1551/3

Test conditions

- Authorized vehicle key required

Work sequence

- -> Fold down left shelf.
- Connect fault reader (or vehicle system tester) with cable V.A.G 1551/3.
- Switch on ignition.
- Operate fault reader taking into account the information on the display:
- Input 1 for "Rapid data transfer".
- Input 25 for address word "Immobilizer" and confirm with Q.
- After the immobilizer control unit has registered, press ⇒ key.

-> Indicated on display:

```
Rapid data transfer     HELP
Select function XX
```

- Input 10 for "Adaption" function and confirm with Q.

-> Indicated on display:

```
Adaption
Feed in channel number XX
```

- Input 00 for channel number 0 and confirm with Q.

-> Indicated on display:

```
Adaption     Q
Erase learnt values?
```

- Confirm entry by pressing Qkey.

-> Indicated on display:

```
Adaption
Learnt values have been erased
```

Protected by copyright. Copying for private or commercial purposes, in part or in whole, is not permitted unless authorised by Volkswagen AG. Volkswagen AG does not guarantee or accept any liability with respect to the correctness of information in this document. Copyright by Volkswagen AG.
satelettronica

- Conclude adaption by pressing ⇒ key.
- Input 06 for "End output" and confirm with Q.
- Switch off ignition

Note:

The identity of the engine control unit is read into the immobilizer control unit when next switching the ignition on.

1.25 - Adapting idling speed

Engine codes ADX and AEA only

In exceptional circumstances e.g. customer complaints concerning droning noises, vibrations at idling speeds, it is permitted to adjust the idling speed slightly. But ensure, that the idling speed is not outside the range printed in the Exhaust emissions test binder, (if the speed is outside the tolerance range it is possible that the vehicle will fail the next exhaust emissions test).

Special tools, testers and auxiliary items

- Fault reader V.A.G 1551 or vehicle system tester V.A.G 1552 with cable V.A.G 1551/3

Test conditions

- No fault stored in fault memory
- Engine oil temperature min. 80 °C

Work sequence

- Connect fault reader V.A.G 1551 (V.A.G 1552) and with the "Address word" 01 select the engine electronics control unit. When doing this the engine should be idling.
  (Connecting fault reader and selecting engine electronics control unit => Page 2 .)

-> Indicated on display:

```
Rapid data transfer     HELP
Select function XX
```

- Press keys 1 and 0 for the "Adaption" function and confirm input with the Q key.

-> Indicated on display:

```
Adaption
Feed in channel number XX
```

- Press keys 0 and 1 for channel number 1 and confirm input with the Q key.

-> Indicated on display:

```
Channel 01     xx     Q
xxx rpm     -↓-↑-
```

- Change the idling speed in 25 rpm jumps with the following keys:
  V.A.G 1551: keys 1 and 3
  V.A.G 1552: keys ↑ and ↓

Note:

The idling speed must not be adjusted to outside the permissible idling speed range. The up-to-date figures for the idling speed can be found in:

=> Emissions test binder

Protected by copyright. Copying for private or commercial purposes, in part or in whole, is not permitted unless authorised by Volkswagen AG. Volkswagen AG does not guarantee or accept any liability with respect to the correctness of information in this document. Copyright by Volkswagen AG.
satelettronica

- Confirm input by pressing Qkey.

-> Indicated on display:

```
Channel 01     xx     Q
Store amended figures?
```

- Confirm entry by pressing Qkey.

-> Indicated on display:

```
Channel 01     xx
Amended figures are stored
```

- Conclude adaption by pressing ⇒ button.
- Press keys 0 and 6 for the "End data transfer" function and confirm input with the Q key.
- Switch off ignition.

1.26 - Checking fuel pressure regulator and holding pressure

Special tools, testers and auxiliary items

- Pressure tester V.A.G 1318
- Adapter 1318/11
- Adapter 1318/23
- Torx-Bit set V.A.G 1766

Test conditions

- Fuel pump delivery rate OK, checking:

=> Repair group 20; Removing and installing parts of the fuel supply system; Checking fuel pump Removing and installing parts of the fuel supply system Checking fuel pump

Test sequence

Note:

Check whether a coded radio is installed as during the forthcoming work sequences the battery earth strap must be disconnected. Obtain radio code first if necessary.

- Remove air cleaner.

Warning!
Fuel system is under pressure! Before opening the system place a cloth around the connection. Then release pressure by carefully loosening the connection.

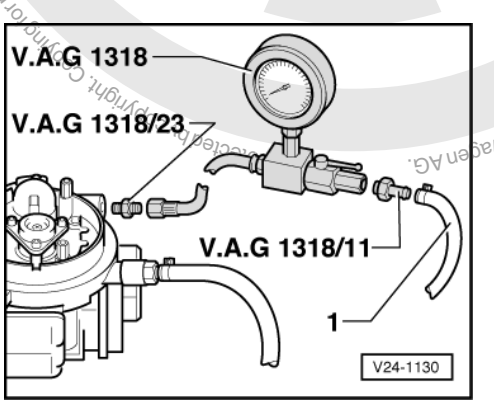

- -> Connect pressure gauge V.A.G 1318 with adapter 1318/11 and /23 between fuel supply pipe -1- and injection unit.

satelettronica

- Open pressure gauge tap. The lever points in direction of flow.
- Start the engine and run at idling speed.

If the engine does not start:

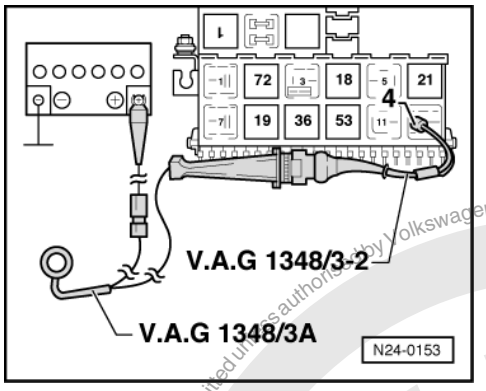

- -> Pull fuel pump relay (J17) out of relay plate (relay position 12).

Note:

If the relay cannot be removed from the relay plate without tools then first disconnect battery earth strap.

- Connect remote control V.A.G 1348/3A with adapter cable V.A.G 1348/3-2 to contact 4 and battery positive (+).
- Operate remote control.

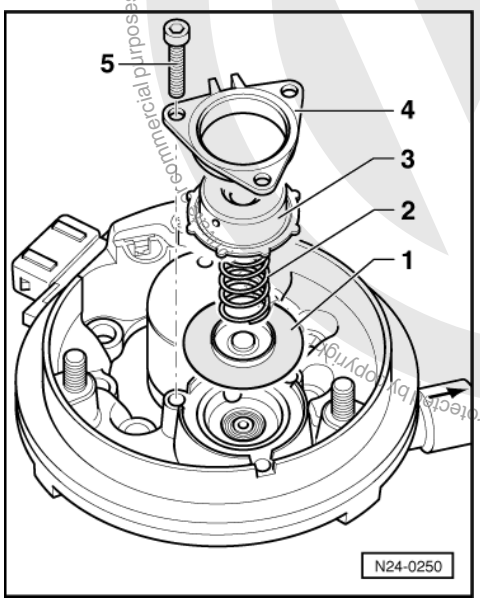

- Check fuel pressure.
  Specification: Approx. 0.8...1.2 bar

If the specification is exceeded or not reached:

- -> Dismantle the pressure regulator.
- Clean the individual parts of the pressure regulator and the injection unit upper part.
- Place the membrane -1- as shown in the injection unit upper part.
- Insert the spring -2- and compress it with the pressure regulator upper part -3-.
- Carefully tighten the retaining ring -4- with screws -5- (tightening torque: 1.5 Nm).
- Repeat the pressure regulator test.

If the specification is again not reached:

Protected by copyright. Copyright by Volkswagen AG. Volkswagen AG does not guarantee or accept any liability with respect to the correctness of information in this document. Copyright by Volkswagen AG. For commercial purposes, in part or in whole, is not permitted unless authorised by Volkswagen AG.
satelettronica

- Replace injection unit upper part.

If the specification is again exceeded:

- Check return pipe for blockage. If no fault is found, replace the injection unit upper part.

If specification attained:

- Switch off ignition or remote control and check holding pressure.
  Specification:
  at least 0.5 bar after 5 minutes.

If the holding pressure drops below specification:

- Check pipe connections, O rings on injector and injector for leaks.
- Check fuel pump non-return valve.

=> Repair group 20; Removing and installing parts of the fuel supply system; Checking fuel pump Removing and installing parts of the fuel supply system Checking fuel pump

If the pressure drops again:

- Renew injection unit upper part.

Note:

The injection unit upper part and components of the fuel pressure regulator are matched to one another. Therefore individual parts of the pressure regulator must not be exchanged. It is only permissible to dismantle the pressure regulator for cleaning. If the pressure regulator is defective the complete injection unit upper part must be replaced.

1.27 - Checking intake air system for leaks (unmetered air)

Special tools, testers and auxiliary items

- Fault reader V.A.G 1551 or vehicle system tester V.A.G 1552 with cable V.A.G 1551/3
- Engine leak detector spray G 001 800 A1

Test sequence

Notes:

- The vacuum in the intake system will cause the leak detector spray to be drawn in with the unmetered air. The leak detector spray reduces the ignitability of the mixture. This leads to a drop in engine speed and to a change of Lambda probe reading.
- The safety precautions listed on the container must be adhered to.

- Connect fault reader V.A.G 1551 (V.A.G 1552) and select engine electronics control unit (address word 01); carry out selection at idling.
  => Page 2

-> Indicated on display:

```
Rapid data transfer      HELP
Select function XX
```

- Input 08 for "Read measured value block" function and confirm with Q.

-> Indicated on display:

```
Read measured value block      HELP
Input display group number XX
```

satelettronica

- Input 00 for "Display group number" and confirm with Q.

-> Indicated on display:
(1...10 = Display zones)

```
Read measured value block     0
     1     2     3     4     5     6
7     8     9     10
```

- Observe reading in display zone 5 (Lambda reading) and note range of reading.
- Systematically spray parts of the intake system with engine leak detector spray.

If the engine speed drops and the reading strays from the above range:

- Check for leaks in the area of intake system sprayed and eliminate leak.

1.28 - Checking intake air preheating

Checking intake housing

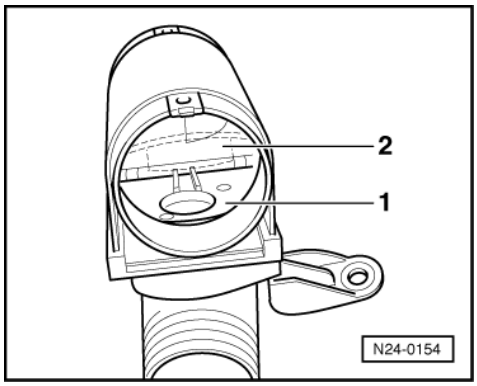

- Remove air cleaner intake housing.
- -> Check position of regulating flap.
  above +22°C:
  Flap must close-off the warm air intake -1-
  -20 up to +22°C:
  Flap must be slightly up to max. 2/3 open -2-.
- By sucking on the vacuum connection (use length of hose) check the function and ease of movement of the regulating flap.

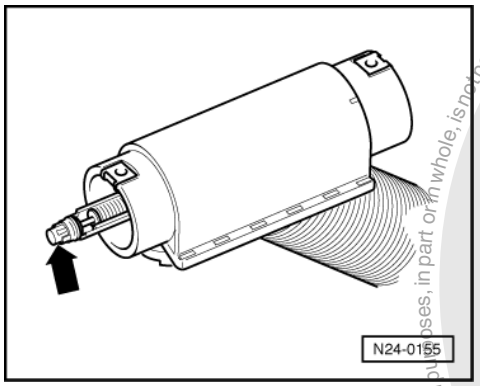

- -> Spray thermo element with chilling spray. The regulating flap must open the warm air intake.

Checking temperature regulator

- Intake housing OK.
- Engine max. hand warm

satelettronica
Protected by copyright. Copying for private or commercial purposes, in part or in whole, is not permitted unless authorised by Volkswagen AG. Volkswagen AG does not guarantee or accept any liability with respect to the correctness of information in this document. Copyright by Volkswagen AG.

- Vacuum hoses connected

- Start engine and run at idling speed.
  Regulating flap must be pulled open
- Pull vacuum hose off temperature regulator on the injection unit.
  Regulating flap must return to its original position after max. 20 seconds.

1.29 - Wire routing engine wiring loom

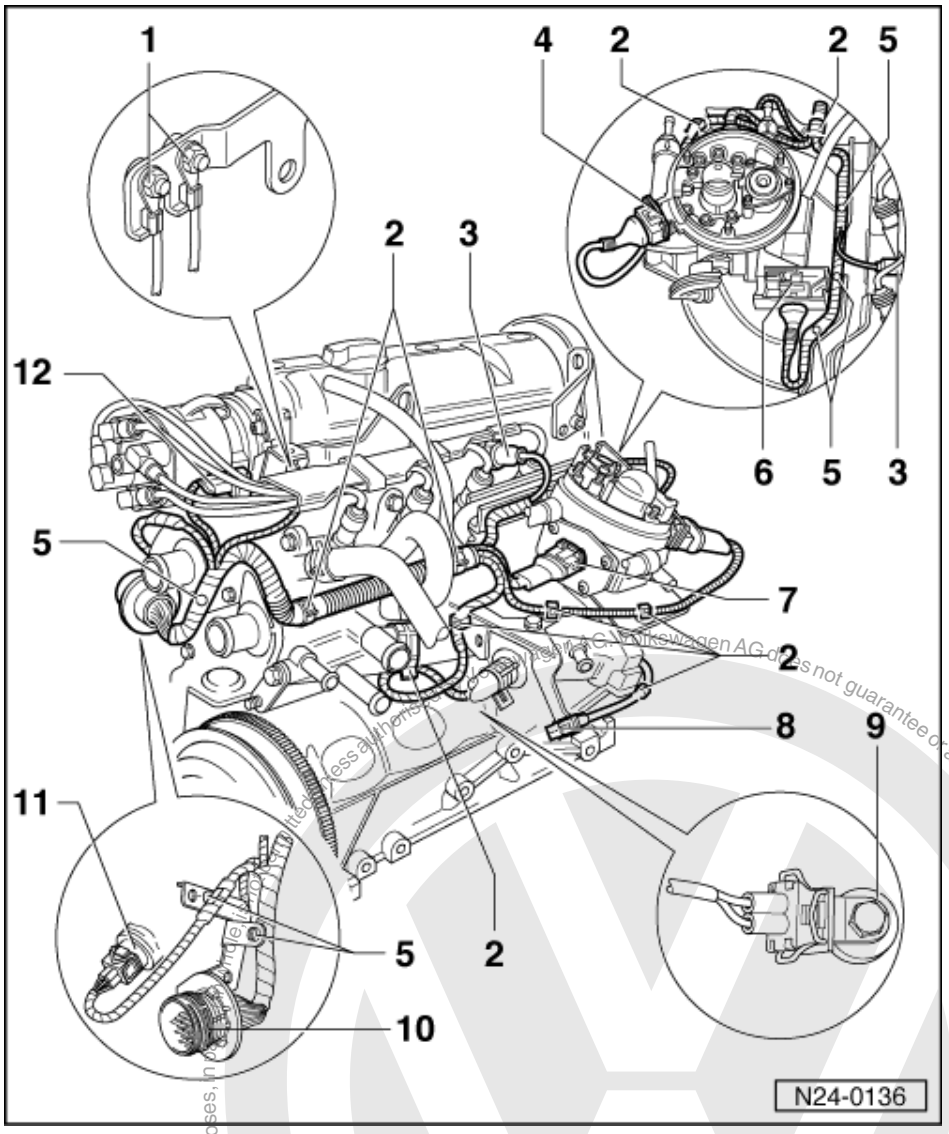

1 Earth connection
2 Clip
3 Oil pressure switch (F22)
4 Injector (N181) connection and intake air temperature sender (G42)
5 Push-in clip
  ◆ Attached to wiring loom
6 Throttle valve positioner (V60) with idling switch (F60)
7 Throttle valve potentiometer (G69)
8 Connector for intake manifold preheating (N51)

satelettronica
Protected by copyright. Copyright by Volkswagen AG.
Volkswagen AG does not guarantee or accept any liability with respect to the correctness of information in this document.

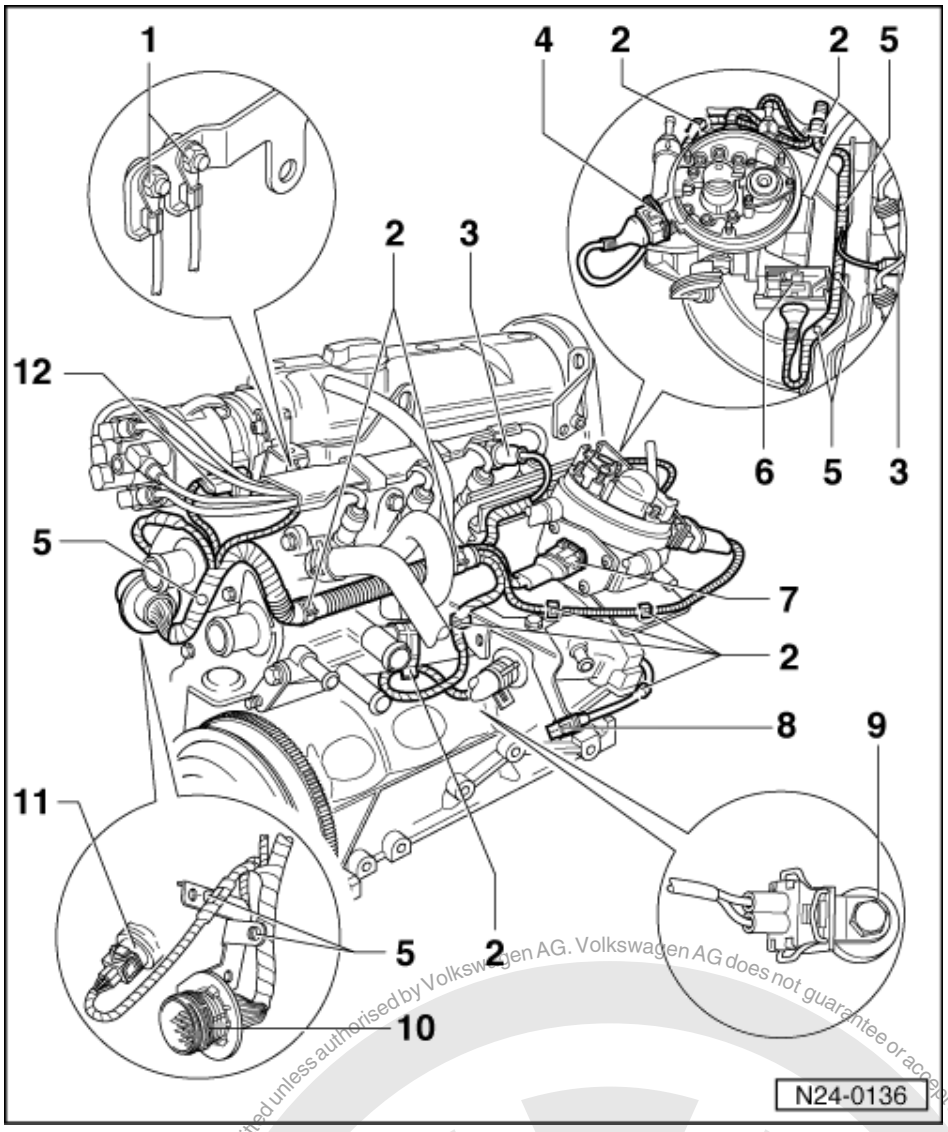

9 Knock sensor 1 (G61)
10 Central connector
11 Coolant temperature sender (G62)
12 Hall sender (G40)

Protected by copyright. Copying for private or commercial purposes, in part or in whole, is not permitted unless authorised by Volkswagen AG. Volkswagen AG does not guarantee or accept any liability with respect to the correctness of information in this document. Copyright by Volkswagen AG.
satelettronica

28 - Ignition system

1 - Mono-Motronic injection and ignition system

1.1 - Mono-Motronic injection and ignition system

1.2 - Servicing ignition part

Notes:

- Only the components which specifically relate to the ignition system are dealt with here. For the other components of the injection and ignition system => Repair group 24.
- The injection and ignition system control unit is equipped with self diagnosis.
- Components marked with * are checked via the self diagnosis.
  => Page 3 , interrogating fault memory
- For trouble-free operation of the electrical components a voltage of at least 11.5 V is necessary.
- During some checks it is possible that the control unit will recognise and store a fault. Therefore after completing all checks and repairs the fault memory must be interrogated and if necessary erased.
  => Page 3 , interrogating fault memory

Safety precautions => Page 70

Test data, spark plugs => Page 70

Protected by copyright. Copying for private or commercial purposes, in part or in whole, is not permitted unless authorised by Volkswagen AG. Volkswagen AG does not guarantee or accept any liability with respect to the correctness of information in this document. Copyright by Volkswagen AG.

satelettronica

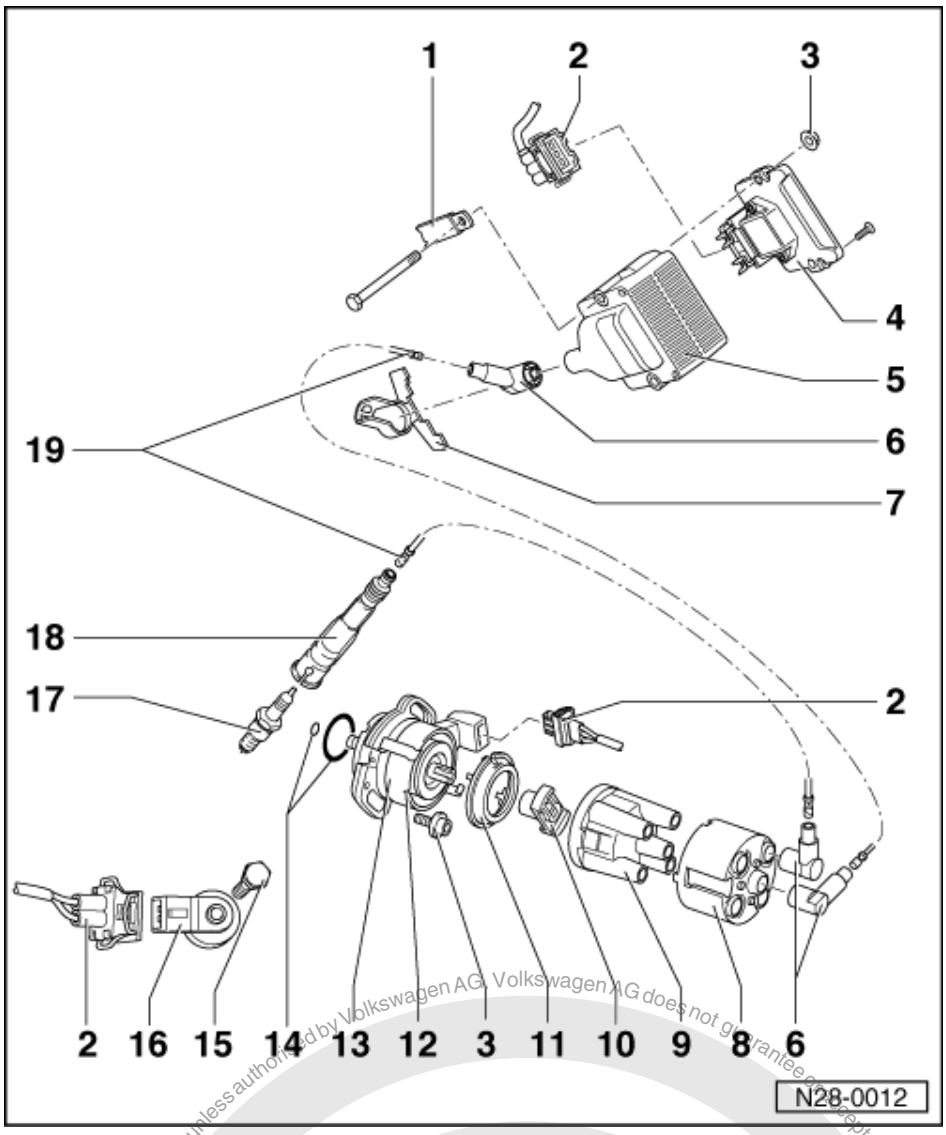

1 Earth strap
2 Connector
3 10 Nm
4 Ignition transformer output stage (N157)
- Checking => Page 74
- Only bolted version can be individually replaced

5 Ignition transformer (N152)
- Checking => Page 73

6 Suppressor
- 0.6...1.4 kω

7 Rotating latch
8 Screening cap
9 Distributor cap
- Check for cracks and signs of tracking
- Check contact wear
- Clean before fitting
- Check carbon brush for wear and freedom of movement

Protected by copyright. Copying for private or commercial purposes, in part or in whole, is not permitted unless authorised by Volkswagen AG. Volkswagen AG does not guarantee or accept any liability with respect to the correctness of information in this document. Copyright by Volkswagen AG.
satelettronica

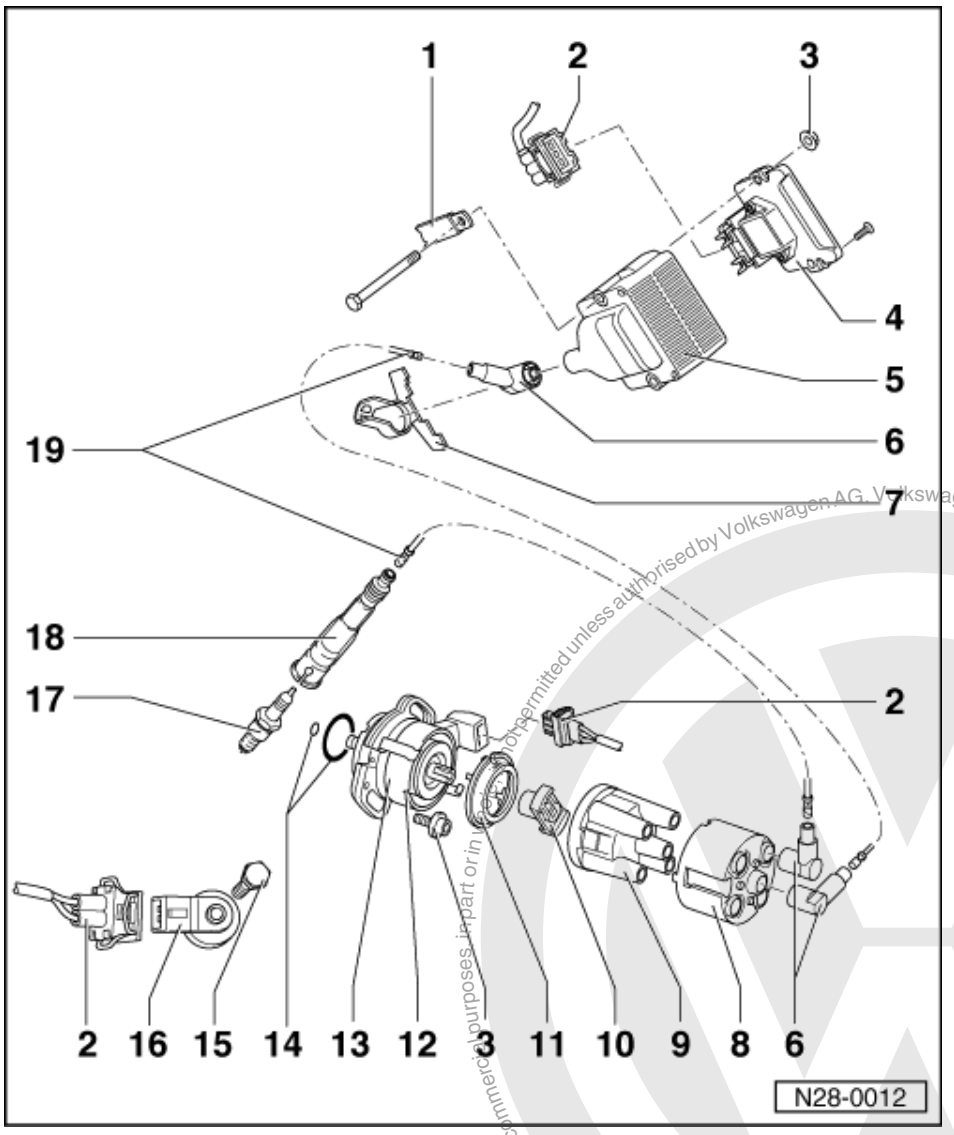

10 Rotor arm
- Marking: R1
- 0.6...1.4 kω

11 Dust cap

12 No. 1 Cyl. marking

13 Ignition distributor with Hall sender (G40)*
- Dismantling and assembling => Page 69
- Checking and adjusting ignition timing => Page 70
- Checking Hall sender
  => Page 72

14 O ring
- Renew if damaged

15 20 Nm
- Tightening torque influences the function of the knock sensor

Protected by copyright. Copying for private or commercial purposes, in part or in whole, is not permitted unless authorised by Volkswagen AG. Volkswagen AG does not guarantee or accept any liability with respect to the correctness of information in this document. Copyright by Volkswagen AG.
satelettronica

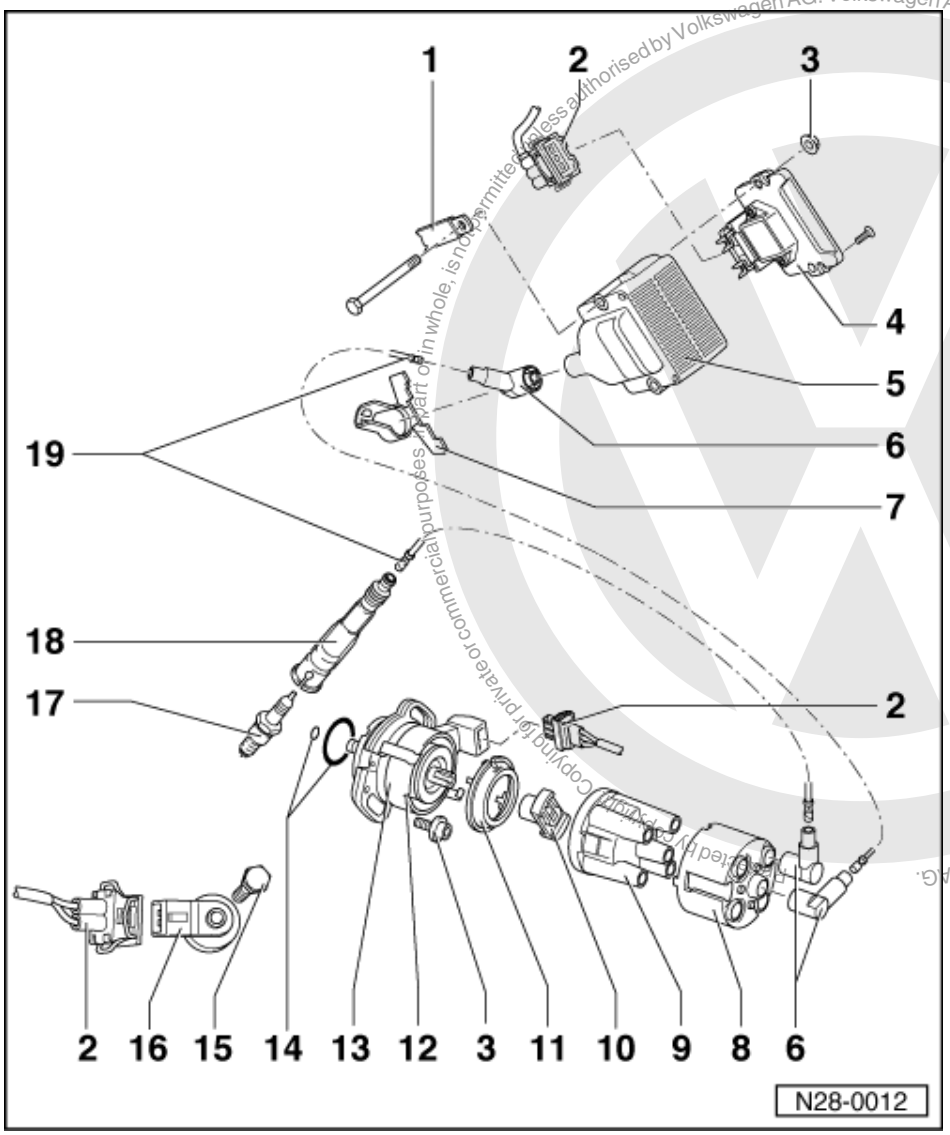

Copyright by Volkswagen AG. Volkswagen AG does not guarantee or accept any liability with respect to the correctness of information in this document. Copyright by Volkswagen AG. Copying for private or commercial purposes, part of in whole, is not permitted unless authorised by Volkswagen AG.

satelettronica

16 Knock sensor 1 (G61)*

- Engine codes ADX, AEA only
- Sensor and connector contacts are gold-plated
- To remove sensor first remove starter

=> Repair group 27; Removing and installing starter Removing and installing starter

17 Spark plug, 25 Nm

- Type and electrode gap
  => Page 70

18 Spark plug connector

- 4...6 kω

19 H.T. cable

- Check for continuity

1.3 - Dismantling and assembling distributor

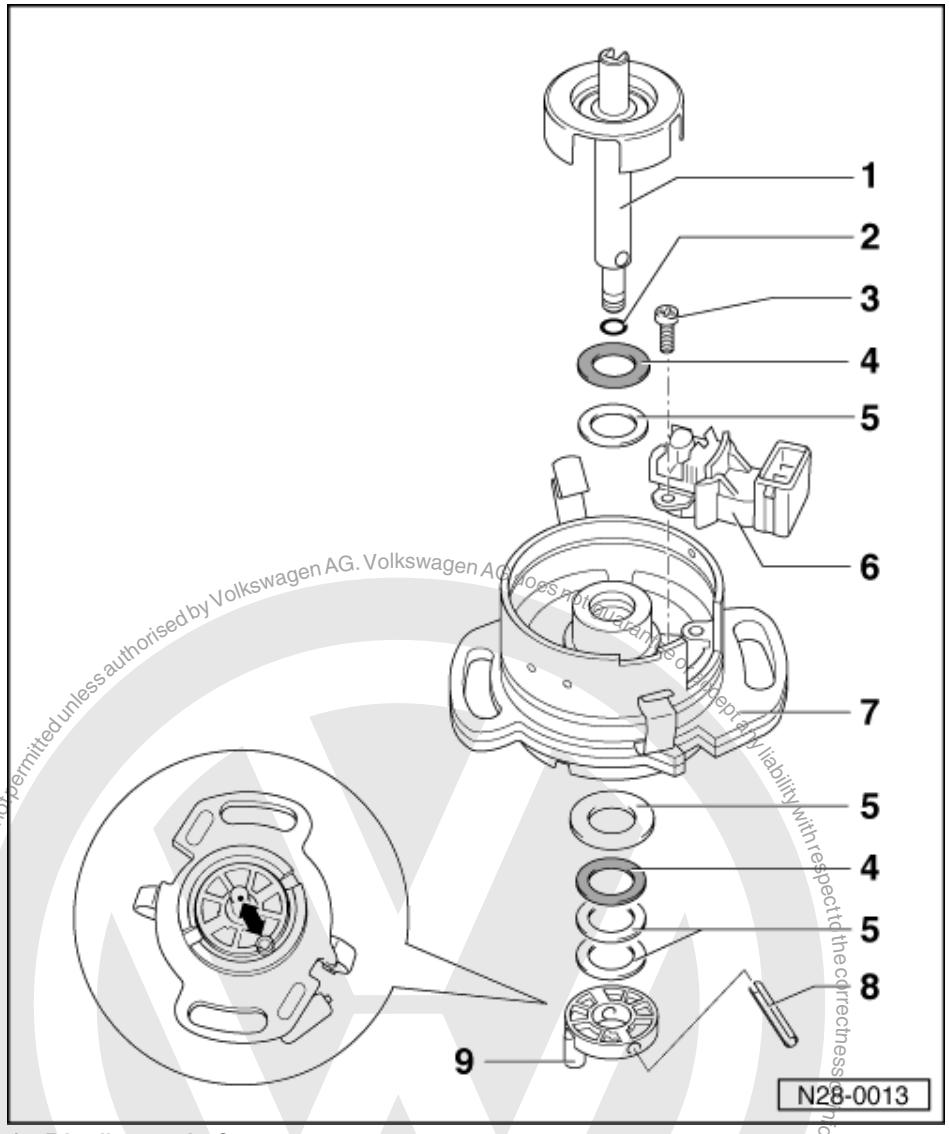

1 Distributor shaft
- With Hall sender rotor
- Pull out after removing the spring pin -7-

2 O ring
- Renew if damaged

3 3 Nm

4 Plastic washer

5 Shim(s)

6 Hall sender (G40)
- Checking => Page 72

7 Distributor body

8 Spring pin

9 Coupling
- Before removing mark position of drive tongue to shaft - 1 -

satelettronica

1.4 - Safety precautions

To prevent injuries to persons and/or damage to the injection and ignition system, the following must be observed:

- Do not touch or pull off ignition wiring when engine is running or turning at starter speed.
- The ignition must be switched off when disconnecting or connecting injection and ignition system wiring as well as test instrument cables.
- If the engine is to be turned at starter speed, without starting, e.g. when checking compressions, pull plug off Hall sender (distributor).
- Do not connect a capacitor to terminal 1 (-).
- Do not replace 1 kω (identification: R1) with a different type even for radio interference suppression.
- For suppression purposes only 1 kω resistances are to be used on the H.T. leads and 5 kω spark plug connectors.

1.5 - Adjustment data, Spark plugs

Engine codes	ADX	AEA	AEV
Ignition timing1)			
Test figure	2...7 ° before TDC		
Adjustment figure	5±1 °before TDC		
Marking	=> Page 71 , Fig. N28-0014		
Speed	750...850 rpm		
Firing order	1-3-4-2		
Spark plugs1)			
VW/Audi	101 000 036AA		
Manuf. designation	NGK BUR 6 ET		
Electrode gap	0.7...0.9 mm		
Tightening torque	25 Nm		

1) Up-to-date specifications:

=> Exhaust emissions test binder

1.6 - Checking and adjusting ignition timing

Special tools, testers and auxiliary items

- Fault reader V.A.G 1551 or vehicle system tester V.A.G 1552 with cable V.A.G 1551/3
- Ignition tester V.A.G 1767 or V.A.G 1367 with HT pick-up clamp V.A.G 1367/8

Check conditions

- Engine oil temperature min. 80 °C

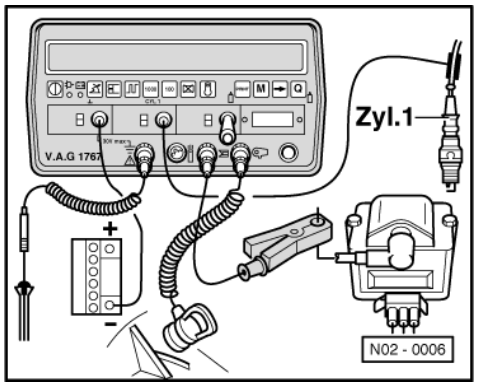

Copyright by Volkswagen AG. Volkswagen AG does not guarantee or accept any liability with respect to the correctness of information in this document. Copyright by Volkswagen AG. Protected by copyright. Copying for private or commercial purposes, in part or in whole, is not permitted unless authorised by Volkswagen AG.
satelettronica

- No faults stored in fault memory
  => Page 3 , interrogating fault memory

Test sequence

- -> Connect ignition tester V.A.G 1767 or ignition tester V.A.G 1367 with HT pick-up clamp V.A.G 1367/8.
- Connect fault reader V.A.G 1551 (V.A.G 1552) and select engine electronics control unit (address word 01); carry out selection at idling.
  => Page 2

-> Indicated on display:

```
Rapid data transfer      HELP
Select function XX
```

- Input 04 for "Initiate basic setting" and confirm with Q.

-> Indicated on display:

```
Basic setting    HELP
Input display group number XX
```

- Input 01 for "Display group number" and confirm with Q.

-> Indicated on display:
(1...4 = Display zones)

```
System in basic setting      1
     1     2     3     4
```

- Check ignition timing.
  Specification: 2...7 ° before TDC1)

With stroboscope:

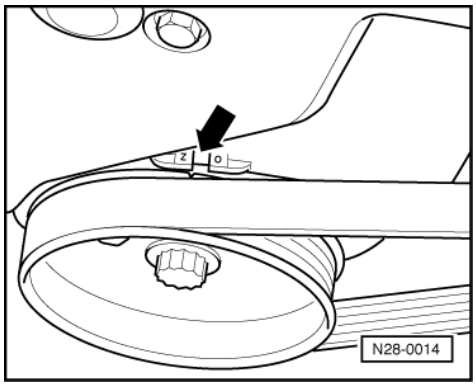

- -> Direct at ignition timing notch.

- If necessary adjust ignition timing by turning distributor.
  Adjusting figure: 5±1 ° before TDC1)

  1) Up-to-date specifications:

=> Emissions test binder

- Press ⇒ key.
- Input 06 for "End output" and confirm with Q.

Protected by copyright. Copying for private or commercial purposes, in part or in whole, is not permitted unless authorised by Volkswagen AG. Volkswagen AG does not guarantee or accept any liability with respect to the correctness of information in this document. Copyright by Volkswagen AG.
satelettronica

1.7 - Checking ignition timing control

Volkswagen AG does not guarantee or accept any liability with respect to the correctness of information in this document. Copyright by Volkswagen AG.

Special tools, testers and auxiliary items

- Ignition tester V.A.G 1767 or V.A.G 1367 with HT pick-up clamp V.A.G 1367/8

Check conditions

- No faults stored in fault memory
  => Page 3 interrogating fault memory
- Engine oil temperature min. 80 °C

Test sequence

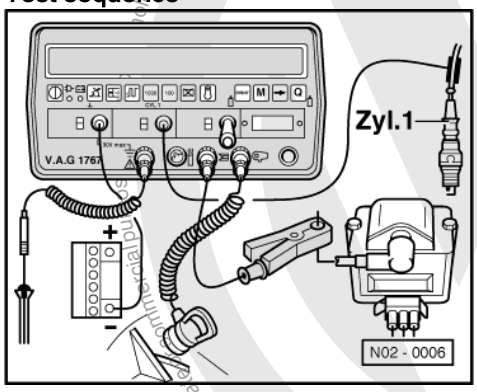

- -> Connect ignition tester V.A.G 1767 or ignition tester V.A.G 1367 with HT pick-up clamp V.A.G 1367/8.
- Start engine and run at idling speed.
- Set ignition tester to 3000 rpm.
- Slowly increase speed to slightly above 3000 rpm until the ignition timing (advance figure) is indicated.
  Specification:
  Engine code ADX: 33...39 ° before TDC
  Engine code AEA: 30...36 °before TDC
  Engine code AEV: 39...45 °before TDC

1.8 - Checking Hall sender

Special tools, testers and auxiliary items

- Test box V.A.G 1598/18
- Hand multimeter V.A.G 1526 or multimeter V.A.G 1715
- Adapter set V.A.G 1594
- Current flow diagram

Test conditions

- Fault on Hall sender recognised by self diagnosis

Test sequence

- Pull plug off Hall sender (distributor).

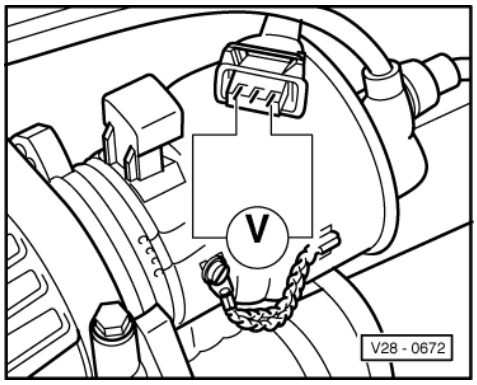

satelettronica

- -> Connect multimeter to measure voltage with aux. cables from V.A.G 1594 to the outer contacts of the plug.
- Switch on ignition.
  Specification: At least 9 V
- Switch off ignition

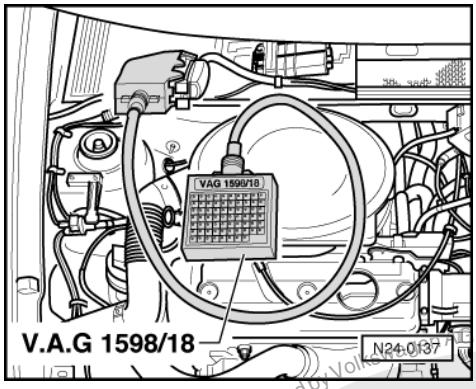

- -> Connect test box V.A.G 1598/18 to control unit wiring loom.
- Check wiring between test box and 3 pin connector for open circuit according to current flow diagram.
  Contact 1+socket 20
  Contact 2+socket 13
  Contact 3+socket 8
  Wire resistance: Max. 1.5 ω
- Additionally check wires for short to one another.
  Specification: ∞ω

If no wiring fault is detected and voltage was present between contacts 1+3:

- Renew Hall sender => Page 69 .

If no wiring fault is detected and no voltage was present between contacts 1+3:

- Renew Mono Motronic control unit (J257)
  =>Page 19 , item 10 .

1.9 - Checking ignition transformer

Special tools, testers and auxiliary items

- Hand multimeter V.A.G 1526 or multimeter V.A.G 1715
- Adapter set V.A.G 1594

Test sequence

- Pull connector and H.T. cable off ignition transformer (N152).

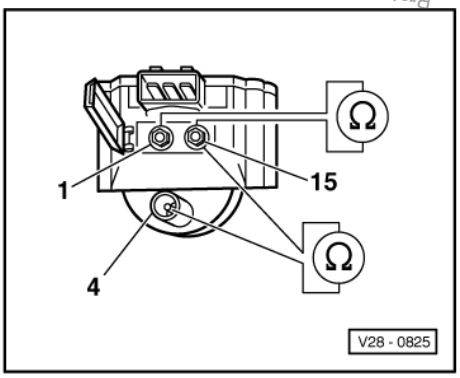

Protected by copyright. Copyright by Volkswagen AG. Volkswagen AG does not guarantee or accept any liability with respect to the correctness of information in this document. Copyright by Volkswagen AG. Protected by copyright. Copyright by Volkswagen AG. Reproduction, in part or in whole, is only permitted for internal or commercial purposes.
satelettronica

- -> Check primary resistance with hand multimeter V.A.G 1526 between terminals 1 and 15.
  Specification: 0.5...1.2 ω
- Check secondary resistance with hand multimeter between terminals 4 and 15.
  Specification: 3...4 kω

If the specifications are not attained:

- Replace ignition transformer.

Protected by copyright. Copying for private or commercial purposes, in part or in whole, is not permitted unless authorised by Volkswagen AG. Volkswagen AG does not guarantee or accept any liability with respect to the correctness of information in this document. Copyright by Volkswagen AG.

1.10 - Checking ignition transformer output stage

Special tools, testers and auxiliary items

- Test box V.A.G 1598/18
- Hand multimeter V.A.G 1526 or multimeter V.A.G 1715
- Diode test lamp V.A.G 1527
- Adapter set V.A.G 1594
- Current flow diagram

Check conditions

- Hall sender OK.
- Ignition transformer OK.

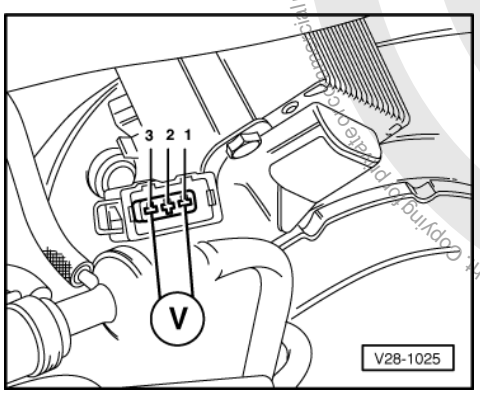

Checking voltage supply

- Pull 3 pin plug off ignition transformer.
- -> Connect multimeter to measure voltage with aux. cables from V.A.G 1594 to the contacts 1+3 of the disconnected plug.
- Switch on ignition.
  Specification: Min. 11 V

If no voltage is present:

- Switch off ignition.
- Check wire between 3 pin connector contact 1 and earth for open circuit according to current flow diagram.
  Wire resistance: Max. 1.5 ω
- Check wire between 3 pin connector contact 3 and relay plate for open circuit according to current flow diagram.
  Wire resistance: Max. 1.5 ω

Checking activation

- Disconnect plug for injector and intake air preheating from the injection unit.

satelettronica

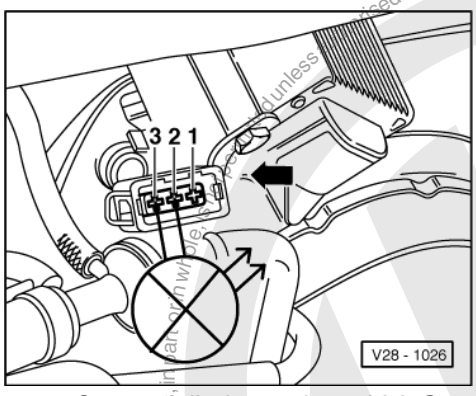

- -> Connect diode test lamp V.A.G 1527 with aux. cables from V.A.G 1594 and adapters V.A.G 1594/15 to contacts 2+3 of the plug.
- Operate starter and check ignition signal from Mono-Motronic control unit.
  LED must flicker

The LED does not flicker:

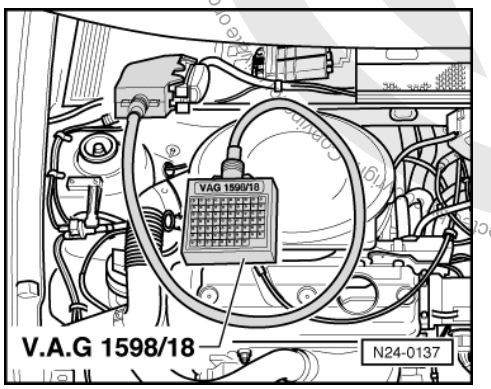

- -> Connect test box V.A.G 1598/18 to control unit wiring loom.
- Check wire between test box socket 24+3 pin connector contact 2 for open circuit according to current flow diagram.
  Wire resistance: Max. 1.5 ω
- Additionally check wires for short to one another.
  Specification: ∞ω

If no wiring fault is detected and voltage was present between contacts 1+3:

- Renew Mono Motronic control unit (J257)
  =>Page 19 , item 10 .

If the voltage supply and activation is OK.:

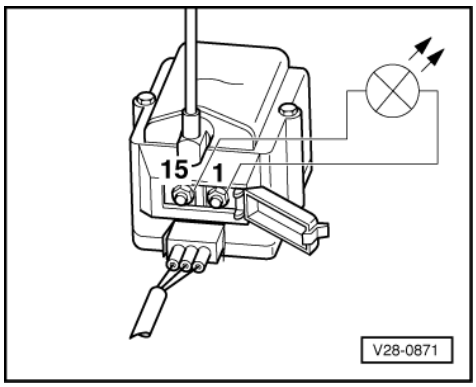

- Connect 3 pin plug and H.T. cable to ignition transformer.

satelettronica

- -> Connect diode test lamp with aux. cables and clamps to the contacts 1 and 15 on ignition transformer.

Warning!
During the following test do not touch the terminals of the ignition transformer or test cables.

- Operate starter.
  The LED must flicker,
  if necessary renew output stage.

1.11 - Checking knock sensor

Special tools, testers and auxiliary items

- Test box V.A.G 1598/18
- Hand multimeter V.A.G 1526 or multimeter V.A.G 1715
- Adapter set V.A.G 1594
- Current flow diagram

Test conditions

- Knock sensor fault recognised by self-diagnosis

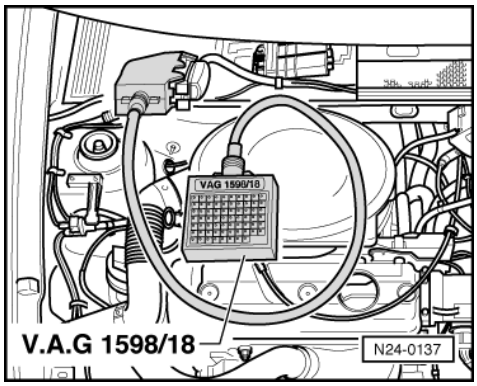

Test sequence

- -> Connect test box V.A.G 1598/18 to control unit wiring loom.
- Check wiring and knock sensor for short.
  Sockets: 19+39, 39+45, 19+45
  Specification: ∞ω

If no short is detected:

- Remove starter.

=> Repair group 27; Removing and installing starter Removing and installing starter

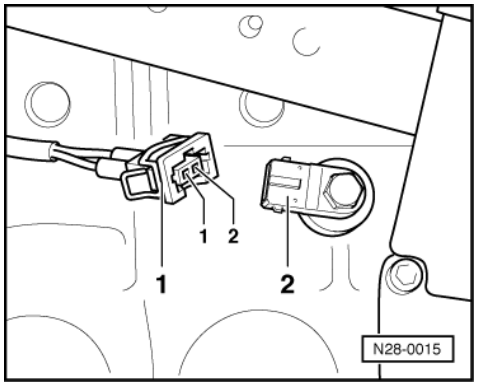

Protected by copyright. Copying for private or commercial purposes, in part or in whole, is not permitted unless authorised by Volkswagen AG. Volkswagen AG does not guarantee or accept any liability with respect to the correctness of information in this document. Copyright by Volkswagen AG.
satelettronica

- -> Pull connector -1- off knock sensor 1 (G61) -2-.
- Check wiring between test box and knock sensor for open circuit according to current flow diagram.
  Contact 1+socket 39
  Contact 2+socket 19
  Wire resistance: Max. 1.5 ω
- Measure resistance between knock sensor contacts.
  Specification ∞ω

If no wiring fault is detected:

- Loosen knock sensor and tighten again to 20 Nm.
- Install starter.

If the fault is still present (fault again in fault memory):

- Replace knock sensor.

Protected by copyright. Copying for private or commercial purposes, in part or in whole, is not permitted unless authorised by Volkswagen AG. Volkswagen AG does not guarantee or accept any liability with respect to the correctness of information in this document. Copyright by Volkswagen AG.

satelettronica